D 101.11:5-1940-221-20P

TECHNICAL MANUAL

RETURN TO GOV. DOCS.

ORGANIZATIONAL MAINTENACE REPAIR PARTS AND SPECIAL TOOLS LIST
BOAT, BRIDGE ERECTION, INBOARD DIESEL ENGINE, ALUMINUM HULL, 27 FT LG
ALUMINUM COMPANY OF AMERICA MODEL HICE-27D
NSN 1940-00-417-0526
HIGHWAY PRODUCTS MODEL HP1-27C MODDED
HIGHWAY PRODUCTS MODEL HP1-27B MODDED
MARINETTE MARINE CORP. MODEL A27 MODDED

This copy is a reprint which includes current pages from Changes 1 through 4.

This manual supersedes TM 5-1940-221-20P, 16 November 1979, including all changes.

HEADQUARTERS, DEPARTMENT OF THE ARMY

22 OCTOBER 1982

CHANGE NO. 4

HEADQUARTERS
DEPARTMENT OF THE ARMY
WASHINGTON, D.C.,11 April 1988

Organizational Maintenance Repair Parts and Special Tools List

BOAT, BRIDGE ERECTION, INBOARD DIESEL ENGINE,
ALUMINUM HULL, 27 FT LG
ALUMINUM COMPANY OF AMERICA MODEL HICE-27D
NSN 1940-00-417-0526
HIGHWAY PRODUCTS MODEL HPI-27C MODDED
HIGHWAY PRODUCTS MODEL HPI-27B MODDED
MARINETTE MARINE CORP. MODEL A27 MODDED

TM 5-1940-221-20P, 22 October 1982, is changed as follows:

1. Remove and insert pages as indicated below. New or changed text material is indicated by a vertical bar in the margin. An illustration change is indicated by a miniature pointing hand.

Remove pages	Insert pages
9 and 10	9 and 10

2. Retain this sheet in front of manual for reference purposes.

By Order of the Secretary of the Army:

CARL E. VUONO
General, United States Army
Chief of Staff

Official:

R. L. DILWORTH
Brigadier General, United States Army
The Adjutant General

DISTRIBUTION:
To be distributed in accordance with DA Form 12-25A, Unit Maintenance requirements for Boat, Bridge Erection, Inboard Diesel Engine, 27 Ft, (HPI-27A, 27B, 27C, 27D).

CHANGE No. 3

HEADQUARTERS
DEPARTMENT OF THE ARMY
WASHINGTON, D.C., 21 October 1987

Organizational Maintenance Repair Parts and Special Tools List

BOAT, BRIDGE ERECTION, INBOARD DIESEL ENGINE,
ALUMINUM HULL, 27 FT LG
ALUMINUM COMPANY OF AMERICA MODEL HICE-27D
NSN 1940-00-417-0526
HIGHWAY PRODUCTS MODEL HPI-27C MODDED
HIGHWAY PRODUCTS MODEL HPI-27B MODDED
MARINETTE MARINE CORP. MODEL A27 MODDED

TM 5-1940-221-20P, 22 October 1982, is changed as follows:

1. Remove and insert pages as indicated below. New or changed text material is indicated by a vertical bar in the margin. An illustration change is indicated by a miniature pointing hand.

Remove pages	Insert pages
20 through 22	20 through 22
121 through 124	121 through 124
127 and 128	127 and 128

2. Retain this sheet in front of manual for reference purposes.

By Order of the Secretary of the Army:

CARL E. VUONO
General, United States Army
Chief of Staff

OFFICIAL:

R. L. DILWORTH
Brigadier General, United States Army
The Adjutant General

DISTRIBUTION:
To be distributed in accordance with DA Form 12-25A, Unit Maintenance requirements for Boat, Bridge Erection, Inboard Diesel Engine, 27 Ft, (HPI-27A, 27B, 27C, 27D).

CHANGE No. 2

HEADQUARTERS
DEPARTMENT OF THE ARMY
WASHINGTON, D.C., 12 February 1987

Organizational Maintenance Repair Parts
and Special Tools List
Boat, Bridge Erection, Inboard Diesel Engine,
Aluminum Hull, 27 FT LG
Aluminum Company of America Model Hice-27D
NSN 1940-00-417-0526
Highway Products Model HPI-27C Modded
Highway Products Model HPI-27B Modded
Marinette Marine Corp. Model A27 Modded

TM 5-1940-221-20P, 22 October 1982, is changed as follows:

1. Remove and insert pages as indicated below. New or changed text material is indicated by a vertical bar in the margin. An illustration change is indicated by a miniature pointing hand.

Remove pages	Insert pages
i and ii	i and ii
123 and 124	123 and 124
127 and 128	127 and 128

2. Retain this sheet in front of manual for reference purposes.

By Order of the Secretary of the Army:

JOHN A. WICKHAM, JR.
General, United States Army
Chief of Staff

Official:

R. L. DILWORTH
Brigadier General, United States Army
The Adjutant General

DISTRIBUTION:
To be distributed in accordance with DA Form 12-25A, Organizational Maintenance requirements for Boat, Bridge Erection, Inboard Diesel Engine, 27 Ft, (HPI-27A, 27B, 27C, 27D) (TM 5-1940-221 Series)

CHANGE NO. 1

HEADQUARTERS
DEPARTMENT OF THE ARMY
WASHINGTON, D.C., 4 September 1984

Organizational Maintenance Repair Parts
and Special Tools Lists

BOAT, BRIDGE ERECTION, INBOARD DIESEL ENGINE,
ALUMINUM HULL, 27 FT LG
ALUMINUM COMPANY OF AMERICA MODEL HICE-27D
NSN 1940-00-417-0526

HIGHWAY PRODUCTS MODEL HPI-27C MODDED
HIGHWAY PRODUCTS MODEL HPI-27B MODDED
MARINETTE MARINE CORP. MODEL A27 MODDED

TM 5-1940-221-20P, 22 October 1982, is changed as follows:

1. Remove and insert pages as indicated below. New or changed text material is indicated by a vertical bar in the margin. An illustration change is indicated by a miniature pointing hand.

Remove pages	Insert pages
i and ii	i and ii
7 and 8	7 and 8
11 through 14	11 through 14
23 and 24	23 and 24
31 and 32	31 and 32
45 and 46	45 and 46
49 and 50	49 and 50
57 and 58	57 and 58
65 and 66	65 and 66
103 through 106	103 through 106
----	106.1 and 106.2
113 through 116	113 through 116

2. Retain this sheet in front of manual for reference purposes.

By Order of the Secretary of the Army:

JOHN A. WICKHAM, JR.
General, United States Army
Chief of Staff

Official:

ROBERT M. JOYCE
Major General, United States Army
The Adjutant General

DISTRIBUTION:
To be distributed in accordance with DA Form 12-25D, Organizational Maintenance Requirements for Special Equipment, Boat Bridge Erection.

TECHNICAL MANUAL
No. 5-1940-221-20P

HEADQUARTERS
DEPARTMENT OF THE ARMY
WASHINGTON, D.C., 22 October 1982

ORGANIZATIONAL MAINTENANCE REPAIR PARTS AND SPECIAL TOOLS LISTS

BOAT, BRIDGE ERECTION, INBOARD DIESEL ENGINE, ALUMINUM HULL, 27 FT LG ALUMINUM COMPANY OF AMERICA MODEL HICE-27D NSN 1940-00-417-0526

HIGHWAY PRODUCTS MODEL HPI-27C MODDED HIGHWAY PRODUCTS MODEL HPI-27B MODDED MARINETTE MARINE CORP. MODEL A27MODDED

Current as of 1 November 1981

REPORTING OF ERRORS AND RECOMMENDING IMPROVEMENTS

You can help improve this manual. If you find any mistakes or if you know of a way to improve the procedures, please let us know. Mail your letter, DA Form 2028 (Recommended Changes to Publications and Blank Forms) or DA Form 2028-2 located in the back of this manual direct to: Commander, U.S. Army Troop Support Command, ATTN: DRSTR-MPS, 4300 Goodfellow Blvd., St. Louis, MO 63120. A reply will be furnished to you.

TABLE OF CONTENTS

		Listing Page	Illus Figure
SECTION I.	INTRODUCTION	v	
II.	REPAIR PARTS LIST		
Group 01.	Lights		
	Running Light	6	1
	SpotlightMast Assembly	8	2
	Range Light	10	4
	Bow Light	12	5
Group 02.	Towing Attachments and Accessory Items		
	Towing Chock and Sheaves	14	6
	Push Knees	16	7
	Stern Section Fittings, On-Board Equipment and Cradle	20	8
	Bow Section Fittings, On-Board Equipment and Cradle	22	9
	Coupling Arm	24	10
	Coupling Yoke	26	11
	Coupling Hook	28	12

TABLE OF CONTENTS (CON'T)

		Listing Page	Illus Figure
Group 03.	Access and Hatch Cover		
	Stern Hatch Cover	30	13
	Engine Hatch Covers	32	14
	Bow Hatch Cover	34	15
	Flooring and Storage Shelves	36	16
Group 04.	Controls		
	Transmission and Bracket Kit	38	17
	Transmission Cable and Bracket Kit	40	17A
	Governor Control Cables and Brackets Kit	42	18
Group 05.	Instrument Panel		
	Instrument Panel	44	19
	Switch Panel	46	20
	Fuse Panel	48	21
	Terminal Board	50	22
	Tachometer Drive	52	24
Group 06.	Fuel System		
	Fuel Strainer	54	25
	Fuel Tank Lines, Fittings, Alarm Bell, and Fuel Pressure and Sensor	56	26
Group 07.	Engine Exhaust Systme		
	Exhaust Pipes, Mufflers and Fittings	60	27
Group 08.	Engine Cooling System		
	Heat Exhchager, Cooling Lines and Fittings	64	28
Group 09.	Engine Starting System		
	Generator Regulator	66	29
	Magnetic Cranking Switch	68	30
	Batteries, Cover and Cables	70	31
Group 10.	Engine		
	V-Belt Shield, V-Belt and Generator Mounting Parts	72	33
	Generator	74	34
	Cranking Motor (Starter)	76	35
	Water Pump	78	36
	Expansion Tank	80	37
	Thermostat and Housing	82	38
	Exhaust Manifold	84	39
	Air Silencer, Emergency Stop Cable and Air Shut Down Housing	86	40
	Fuel Filter	89	43
	Fuel Pump	90	44
	Engine Lubricating Oil Filter and Oil Pressure Sensor	92	45
	Transmission Oil Cooler	94	46
	Valve Rocker Cover	96	48
	Oil Pan, Inlet Pipe, Screen and Dipstick	98	61
	Cylinder Block	100	62
Group 11.	Transmission		
	Throttle and Transmission Control Head	102	63
Group 12.	Steering System		
	Rudder Linkage	104	66
	Steering Quadrant	106	67
	Steering Wheel, Linkage and Gear Boxes	106.2	68
	Steering Wheel, Linkage and Gear Box	108	68A
Group 13.	Propeller and Propeller Shaft		
	Propeller, Strut and Shaft	112	69

TABLE OF CONTENTS (CON'T)

		Listing Page	Illus Figure
Group 14.	Bilge Pump		
	Electric Bilge Pump	114	70
	Manual Bilge Pump	116	71
Group 15.	Fire Extinguisher System		
	Fire Extinguisher, Lines and Fittings	118	72
	NATIONAL STOCK NUMBER AND REFERENCE NUMBER INDEX		

Section I. INTRODUCTION

1. Scope. This manual lists repair parts, special tools, test, measurement, and diagnostic equipment (TMDE), and other support equipment required for operation and performance of organizational maintenance of the Boat Erection Bridge.

2. General.

a. Section II - Repair Parts List. A list of repair parts authorized for use in the performance of maintenance. The list also includes parts which must be removed for replacement of the authorized parts. Parts lists are composed of functional groups in ascending numerical sequence, with the parts in each group listed in figure and item number sequence. Bulk materials are listed in NSN sequence, as the last group in Section II.

b. (ALL) Special Tools, Test and Support Equipment - Section III. A list of special tools, test and support equipment authorized for the performance of maintenance at the organizational level.

c. Section IV - National Stock Number and Part Number Index. A list, in ascending numerical sequence, of all National Stock Numbers appearing in the listings, followed by a list, in alphanumeric sequence, of all part numbers appearing in the listings. National Stock Number and part numbers are cross-referenced to each illustration figure and item number appearance.

3. Explanation of Columns. The following provides an explanation of coulmns found in the tabular listings:

a. Illustration. This column is divided as follows:

(1) Figure Number. Indicates the figure number of the illustration in which the item is shown.

(2) Item Number. The number used to identify each item called out in the illustration.

b. Source, Maintenance, and Recoverability Codes (SMR).

(1) Source Code. Source codes are assigned to support items to indicate the manner of acquiring support items for maintenance, repair, or overhaul of end items. Source codes are entered in the first and second positions of the Uniform SMR Code format as follows:

Code	*Definition*
PA	Item procured and stocked for anticipated or known usage.
PB	Item procured and stocked for insurance purposes because essentiality dictates that a minimum quantity be available in the supply systems.
PC	Item procured and stocked and which otherwise would be coded PA except that it is deterorative in nature.
PD	Support item, excluding support equipment, procured for initial issue or outfitting and stocked only for subsequent or additional initial issues or outfittings. Not subject to automatic replenishment.
PE	Support equipment procured and stocked for initial issue or outfitting to specified maintenance repair activities.
PF	Support equipment which will not be stocked but which will be centrally procured on demand.
PG	Item procured and stocked to provide for sustained support for the life of the equipment. It is applied to an item peculiar to the equipment which, because of probable discontinuance or shutdown of production facilities, would prove uneconomical to reproduce at a later time.
KD	An item of a depot overhaul/repair kit and not purchased separately. Depot kit defined as a kit that provides items required at the time of overhaul or repair.
KF	An item of a maintenance kit and not purchased separately. Maintenance kit defined as a kit that provides an item that can be replaced at organizational or intermediate levels of maintenance.
KB	Item included in both a depot overhaul/repair kit and a maintenance kit.
MO	Item to be manufactured or fabricated at organizational level.
MF	Item to be manufactured or fabricated at the direct support maintenance level.
MH	Item to be manufactured or fabricated at the general support maintenance level.
MD	Item to be manufactured or fabricated at the depot maintenance level.
AO	Item to be assembled at organizational level.
AF	Item to be assembled at direct support maintenance level.

Code	Definition
AH	Item to be assembled at general support maintenance level.
AD	Item to be assembled at depot maintenance level.
XA	Item is not procured or stocked because the requirements for the item will result in the replacement of the next higher assembly.
XB	Item is not procured or stocked. If not available through salvage, requisition.
XD	A support item that is not stocked. When required, item will be procured through normal supply channels.

NOTE

Cannibalization or salvage may be used as a source of supply for any items source coded above except those coded XA or XD.

(2) Maintenance Code. Maintenance codes are assigned to indicate the levels of maintenance authorized to use and repair support items. The maintenance codes are entered in the third and fourth positions of the Uniform SMR Code format as follows:

(a) The maintenance code entered in the third position will indicate the lowest maintenance level authorized to remove, replace, and sue the support item. The maintenance code entered in the third position will indicate one of the following levels of maintenance.

Code	Application/Explanation
C	Crew or operator maintenance performed within organizational maintenance.
O	Support item is removed, replaced, used at the organizational level.
I	Support item is removed, replaced, used by the direct support element of integrated direct support maintenance.
F	Support item is removed, replaced, used at the direct support level.
H	Support item is removed, replaced, used at the general support level.
D	Support items that are removed, replaced used at depot, mobile depot, specialized repair activity only.

NOTE

Codes "I" and "F" will be considered the same by direct support units.

(b) The maintenance code entered in the fourth position indicates whether the item is to be repaired and identifies the lowest maintenance level with the capability to perform complete repair (i.e., all authorizedd maintenance functions). This position will contain one of the following maintenance codes:

Code	Application/Explanation
O	The lowest maintenance level capable of complete repair of the support item is the organizational level.
F	The lowest maintenance level capable of complete repair of the support item is the direct support level.
H	The lowest maintenance level capable of complete repair of the support item is the general support level.
D	The lowest maintenance level capable of complete repair of the support item is the depot level.
L	Repair restricted to designated specialized repair activity.
Z	Nonreparable. No repair is authorized.
B	No repair is authorized. The item may be reconditioned by adjusting, lubricating, etc., at the user level. No parts or special tools are procured for the maintenance of this item.

(3) Recoverability Code. Recoverability codes are assigned to support items to indicate the disposition action on unserviceable items. The recoverability code is entered in the fifth position of the Uniform SMR Code format as follows:

Recoverability Codes	Definition
Z	Nonreparable item. When unserviceable, condemn and dispose at the level indicated in Position 3.

Recoverability Codes	*Definition*
O	Reparable item. When uneconomically reparable, condemn and dispose at organizational level.
F	Reparable item. When uneconomically reparable, condemn and dispose at the direct support level.
H	Reparable item. When uneconomically reparable, condemn and dispose at the general support level.
D	Reparable item. When beyond lower level repair capability, return to depot. Condemnation and disposal not authorized below depot level.
L	Reparable item. Repair, condemnation, and disposal not authorized below depot/specialized repair activity level.
A	Item requires special handling or condemnation procedures because of specific reasons (i.e., precious metal content, high dollar value, critical material or hazardous material). Refer to appropriate manuals/directives for specific instructions.

c. National Stock Number. Indicates the National Stock Number assigned to the item and will be used for requisitioning purposes.

d. Part Number. Indicates the primary number used by the manufacturer which controls the design and characteristics of the item by means of its engineering drawings, specifications standards, and inspection requirements to identify an item or range of items.

NOTE

When a stock numbered item is requisitioned, the repair part received may have a different part number than the part being replaced.

e. Federal Supply Code for Manufacturer (FSCM). The FSCM is a 5-digit numeric code listed in SB 708-42 which is used to identify the manufacturer, distributor, or Government agency, etc.

f. Description. Indicates the Federal item name and, if required, a minimum description to identify the item. Items that are included in kits and sets are listed below the name of the kit or set with the quantity of each item in the kit or set indicated in the quantity incorporated in unit column. When the part to be used differs between serial numbers of the same model, the effective serial numbers are shown as the last line of the description. In the Special Tools List, the initial basis of issue (BOI) appears as the last line in the entry for each special tool, TMDE, and support equipment. When density of equipments supported exceeds density spread indicated in the basis of issue, the total authorization is increased accordingly.

g. Unit of Measure (U/M). Indicates the standard of the basic quantity of the listed items as used in performing the actual maintenance function. This measure is expressed by a two-character alphabetical abbreviation (e.g., ea, in, pr, etc.). When the unit of measure differs from the unit of issue, the lowest unit of issue that will satisfy the required units of measure will be requisitioned.

h. Quantity Incorporated in Unit. Indicates the quantity of the item used in the breakout shown on the illustration figure, which is prepared for a functional group, subfunctional group, or an assembly. A "V" appearing in this column in lieu of a quantity indicates that no specific quantity is applicable, (e.g., shims, spacers, etc.).

4. Special Information.

a. "In the parts list, some items are indented to show that they are a component or components of the item under which they are indented."

b. Usable on codes are shown in the description column. Identification of the usable codes used in this publication are:

Code	*Used On*
CCC	Model HICE27D
CUA	Model HPI27CMODDED
CUB	Model HPI27BMODDED
CUC	Model A27MODDED

b. Repair parts kits and gasket sets appear as the last entries in the repair parts listing for the figure in which its parts are listed as repair parts or are listed at the end of the repair parts listing for the last figure containing parts of the kit.

c. The following publications pertain to the Boat Erection Bridge and its components.

TM 5-1940-221-12	Operator and Organizational Maintenance Manual
TM 5-1940-221-34	Direct and General Support Maintenance Manual

TM 5-1940-221-34P	Direct and General Support Maintenance Repair Parts and Special Tools List
LO 5-1940-221-12	Lubrication Order

d. The illustration in this manual are identical to those published in TM 5-1940-221-34P. Only those parts assigned the third position SMR maintenance code "C" or "O" are listed in the tabular listing; therefore, there may be a break in the item number sequence. Only illustrations containing organizational authorized items appear in this manual.

5. How to Locate Repair Parts

a. When National Stock Number or Part Number is Unknown:

(1) First. Using the table of contents, determine the functional group within which the repair part belongs. This is necessary since illustrations are prepared for functional groups, and listings are divided into the same groups.

(2) Second. Find the illustration covering the functional group to which the repair part belongs.

(3) Third. Identify the repair part on the illustration and note the illustration figure and item number of the repair part.

(4) Fourth. Using the Repair Parts Listings, find the figure and item number noted on the illustration.

b. When National Stock Number or Part Number is Known.

(1) First. Using the Index of National Stock Numbers and Part Numbers, find the pertinent National Stock Number or part number. This index is in ascending NIIN sequence followed by a list of part numbers in ascending alphanumeric sequence, cross-referenced to the illustration figure number and item number.

(2) Second. After finding the figure and item number, locate the figure and item number of the repair parts list.

6. Abbreviations.

Abbreviations	*Explanation*
deg	degree(s)
ea	each
ft	feet (foot)
grp	group
id	inside diameter
in.	inch(es)
lg	long (length)
mtg	mounting(s)
No.	Number(s)
od	outside diameter

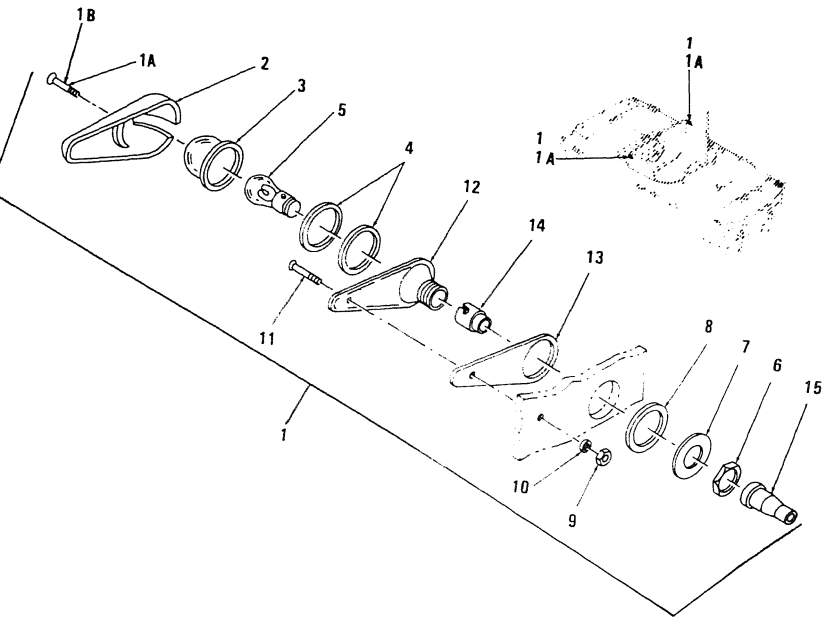

Figure 1. Running Light

(1) ILLUSTRATION (a) FIG NO	(b) ITEM NO	(2) SMR CODE	(3) NATIONAL STOCK NUMBER	(4) FSCM	(5) PART NUMBER	(6) DESCRIPTION USABLE ON CODE	(7) U/M
						GROUP 01 LIGHTS	
1	1	PAOZZ	6220-01-130-1592	79577	13220E6312-2	.LIGHT,NAVIGATIONAL , GREEN.....CCC,CUA	EA
1	1	PAOZZ	6220-01-130-1591	79577	13220E6312-1	.LIGHT,NAVIGATIONAL , RED.....CCC,CUA	EA
1	1A	PAOOO	6220-00-307-8820	46576	F1G91-R C2	.LIGHT PORT RUNNING.....CUB,CUC	EA
1	1A	PAOOO	6220-00-389-6215	46576	91-2G	.LIGHT STARBOARD RUNNING.....CUB,CUC	EA
1	1B	PAOZZ	5305-00-727-8834	96906	MS51959-48	.SCREW,MACHINE RETAINER MTG,8-32 THD SIZE.....CCC,CUA	EA
1	2	XBOZZ		79577	3885-2	.RETAINER RUNNING LIGHT.....CCC,CUA	EA
1	3	PAOOO	6220-00-838-0181	79577	3885-7R	.GLOBE RED,RUNNING LIGHT PORT.....CCC,CUA	EA
1	3	PAOZZ	6220-00-299-6125	46576	259-2R	.LENS RED.....CUB,CUC	EA
1	3	PAOZZ	6220-00-299-6124	46576	259-2G	.LENS GREEN.....CUB,CUC	EA
1	4	PAOZZ	5330-00-835-1886	79577	3885-9	.GASKET GLOBE,RUNNING LIGHT.....CCC,CUA	EA
1	5	PAOZZ	6240-00-155-7795	96906	MS15584-15	.LAMP INCANDESCENT,RUNNING LIGHT.....CCC,CUB,CUC	EA
1	5	PAOZZ	6240-00-155-7784	96906	MS35478-307	.LAMP,INCANDESCENT RUNNING LIGHT.....CUA	EA
1	6	XBOZZ		79577	3885-4	.NUT,HEXAGON ADAPTER RUNNING LIGHT.....CCC,CUA	EA
1	7	XAOZZ		79577	3885-3	.WASHER,FLAT ADAPTER RUNNING LIGHT.....CCC,CUA	EA
1	8	XAOZZ		79577	3885-5	.ADAPTER,RETAINER RUNNING LIGHT.....CCC,CUA	EA
1	9	PAOZZ	5310-00-941-9452	96906	MS21083B08	.NUT,SELF-LOCKING HEXAGON.....CCC,CUA	EA
1	10	PAOZZ	5310-00-045-5206	96906	MS15795-907	.WASHER,FLAT BASE SCREW,RUNNING LIGHT.....CCC,CUA	EA
1	11	PAOZZ	5305-00-764-0075	96906	MS51959-49	.SCREW,MACHINE BASE MTG,RUNNING LIGHT.....CCC,CUA	EA
1	12	XBOZZ		79577	3885-1	.BASE RUNNING LIGHT.....CCC,CUA	EA
1	13	XBOZZ	5330-00-835-1885	79577	3885-8	.GASKET RUNNING LIGHT.....CCC,CUA	EA
1	14	XBOZZ		79577	42-002-25	.SOCKET,LAMP RUNNING LIGHT.....CCC,CUA	EA
1	15	PAOZZ	5975-00-284-9041	77060	5289527	.NIPPLE,SOCKET RUNNING LIGHT.....CCC,CUA	EA

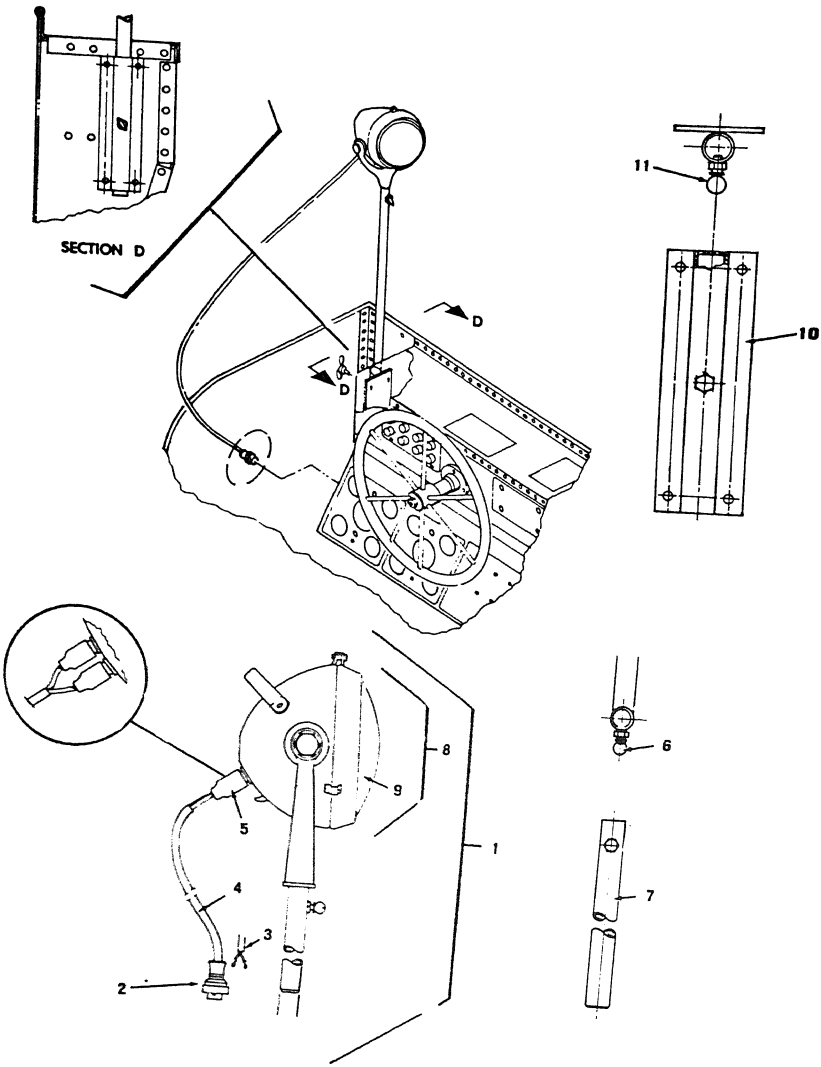

Figure 2. Spotlight Mast Assembly

(1) ILLUSTRATION (a) FIG. NO.	(b) ITEM NO.	(2) SMR CODE	(3) NATIONAL STOCK NUMBER	(4) FSCM	(5) PART NUMBER	(6) DESCRIPTION USABLE ON CODE	(7) U/M	(8) QTY INC IN UNIT
2	1	PAOOO	2040-01-090-3307	97403	13222E7249	SPOTLIGHT MAST ASSY.....	EA	1
2	2	XDOZZ		79645	R-1538	.PLUG.....	EA	1
2	3	PAOZZ	5940-00-143-4780	96906	MS25036-108	.TERMINAL,LUG.....	EA	2
2	4	PAOZZ	6145-00-889-0645	81349	C0-02MOF2-16-0 335	.CABLE 4 FT REQUIRED.....	FT	1
2	5	PAOZZ	5935-00-462-6603	96906	MS27142-2	.CONNECTOR,PLUG,ELEC.....	EA	2
2	6	PAOZZ	5305-00-340-6364	96906	MS21316-22	.THUMBSCREW MAST SPOTLIGHT.....	EA	1
2	7	XDOZZ		97403	13222E7261	.MAST SPOTLIGHT.....	EA	1
2	8	PAOOO	6220-00-878-7301	96906	MS51320-1	.FLOODLIGHT.....	EA	1
2	9	PAOZZ	6240-00-295-2421	96906	MS18006-4572	..LAMP,INCANDESCENT.....	EA	1
2	10	PAOZZ	2040-01-090-3306	97403	13222E7239	.BRACKET MOUNTING SEARCHLIGHT.....	EA	1
2	11	PAOZZ	5305-00-056-9384	96906	MS21316-33	.THUMBSCREW BRACKET SEARCHLIGHT.....	EA	1

FIGURE 3 NOT APPLICABLE

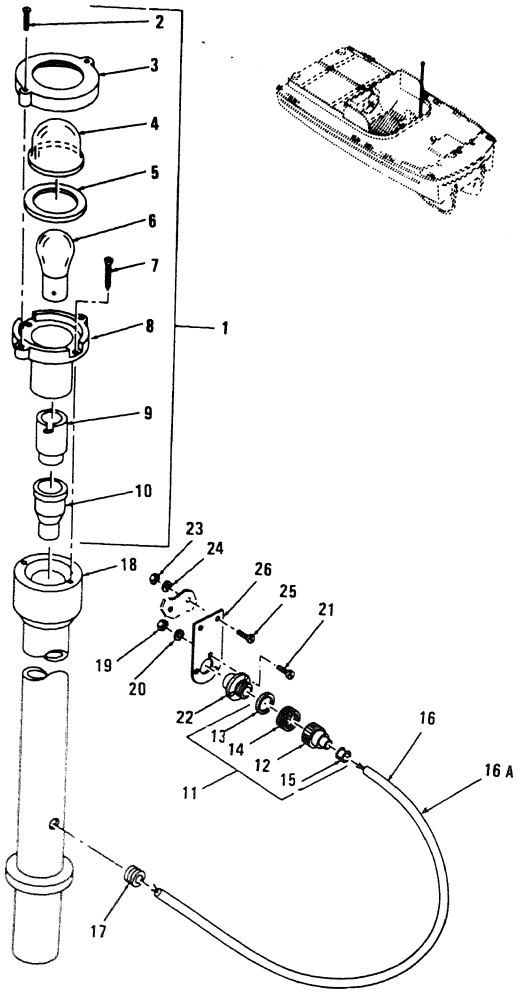

Figure 4. Range Light

(1) ILLUSTRATION (a) FIG NO	(b) ITEM NO	(2) SMR CODE	(3) NATIONAL STOCK NUMBER	(4) FSCM	(5) PART NUMBER	(6) DESCRIPTION USABLE ON CODE	(7) U/M	(8) QTY INC IN UNIT
4		PAOZZ	6220-01-105-6432	97403	13222E7250	LIGHT MAST ASSY STERN....CUB,CUC	EA	1
4		PAOZZ	6240-00-155-7790	96906	MS15584-16	.LAMP,INCANDESCENT....CUB,CUC	EA	4
4		XBOZZ		97403	13222E7242	MAST LIGHT....CUB,CUC	EA	1
4		PAOZZ	6220-00-837-2176	97403	13213E5184	LIGHT AND MAST ASSEMBLY,RANGE....CCC,CUA	EA	1
4	1	PAOZZ	6220-00-838-5977	79577	FIG3894	.LIGHT,NAVIGATIONAL, STERN....CCC,CUA	EA	1
4	2	XDOZZ		79577	5322-6	..SCREW MACHINE COVER,5-40 RHB X 3/8 IN.LG....CCC,CUA	EA	2
4	3	XBOZZ		79577	3887-2	..RETAINER CLEAR GLOBE....CCC,CUA	EA	1
4	4	PAOZZ	6220-00-838-0182	79577	3886-3	..GLOBE CLEAR....CCC,CUA	EA	1
4	5	PAOZZ		79577	3895-3	..GASKET GLOBE....CCC	EA	1
4	5	PAOZZ	5330-00-835-1886	79577	3885-9	..GASKET GLOBE....CUA	EA	1
4	6	PAOZZ	6240-00-155-7795	96906	MS15584-15	..LAMP,INCANDESCENT....CCC,CUA	EA	1
4	7	PAOZZ	5305-00-770-2579	96906	MS51959-15	..SCREW,MACHINE MTG,4-40 UNC-2A X 3/8 IN.LG....CCC,CUA	EA	2
4	8	XAOZZ		79577	3892-1	..BASE....CCC,CUA	EA	1
4	9	XBOZZ		79577	42-002-25	..SOCKET,LIGHT....CCC	EA	1
4	9	XDOZZ		79577	3885-13	..SOCKET LIGHT....CUA	EA	1
4	10	PAOZZ	5975-00-284-9041	77060	5289527	..NIPPLE....CCC,CUA	EA	1
4	11	XBOZZ	5935-00-089-0304	79577	FIG151	..PLUG,CONNECTOR....CCC	EA	1
4	12	XAOZZ		13445	M-424	..PLUG....CCC,CUA	EA	1
4	13	XAOZZ		79577	151-3	..GASKET,PLUG 13/16 OD X 5/8 ID X 3/32 IN.THK....CCC,CUA	EA	1
4	14	XAOZZ		79577	151-1	..CAP,PLUG 1 1/8 DIA X 5/16 IN.LG....CCC,CUA	EA	1
4	15	XAOZZ		79577	151-4	..GROMMET,RUBBER....CCC,CUA	EA	1
4	16	MOOZZ		97403	13213E5480	.CABLE ASSEMBLY SPEC RANGE LIGHT MANUFACTURE FROM....CCC,CUA	EA	1
4	16A	XBOZZ		81349	C0-02MOF2-16-03 35	..CABLE,ELECTRICAL 6 FT REQUIRED....CCC,CUA	FT	V
4	17	PAOZZ	5325-00-185-0004	96906	MS35489-40	.GROMMET,NONMETALLIC 3/8 ID X 5/8 GROOVE DIA X 1/8 GROOVE WIDTH....CCC,CUA	EA	1
4	18	XBOZZ	2020-01-098-4672	97403	13213E5187	.MAST STERN,LIGHT....CCC,CUA	EA	1
4	19	PAOZZ	5310-00-905-8451	96906	MS21083N06	NUT,SELF LOCKING....CCC,CUA,CUC	EA	3
4	20	PAOZZ	5310-00-082-1404	96906	MS27183-6	WASHER,FLAT....CCC,CUA	EA	3
4	21	PAOZZ	5305-00-958-5450	96906	MS35190-240	SCREW,MACHINE....CCC,CUA	EA	3
4	22	PBOZZ		79577	FIG149	CONNECTOR,DECK SOCKET....CCC,CUA	EA	1
4	23	PAOZZ	5310-00-877-5797	96906	MS21044N3	NUT,SELF LOCKING....CCC,CUA	EA	2
4	24	PAOZZ	5310-00-809-8546	96906	MS27183-8	WASHER,FLAT....CCC,CUA	EA	2
4	25	PAOZZ	5305-00-989-7435	96906	MS35207-264	SCREW,MACHINE....CCC,CUA	EA	2
4	26	XBOZZ		97403	13213E6680	PLATE,RETAINING....CCC,CUA	EA	1

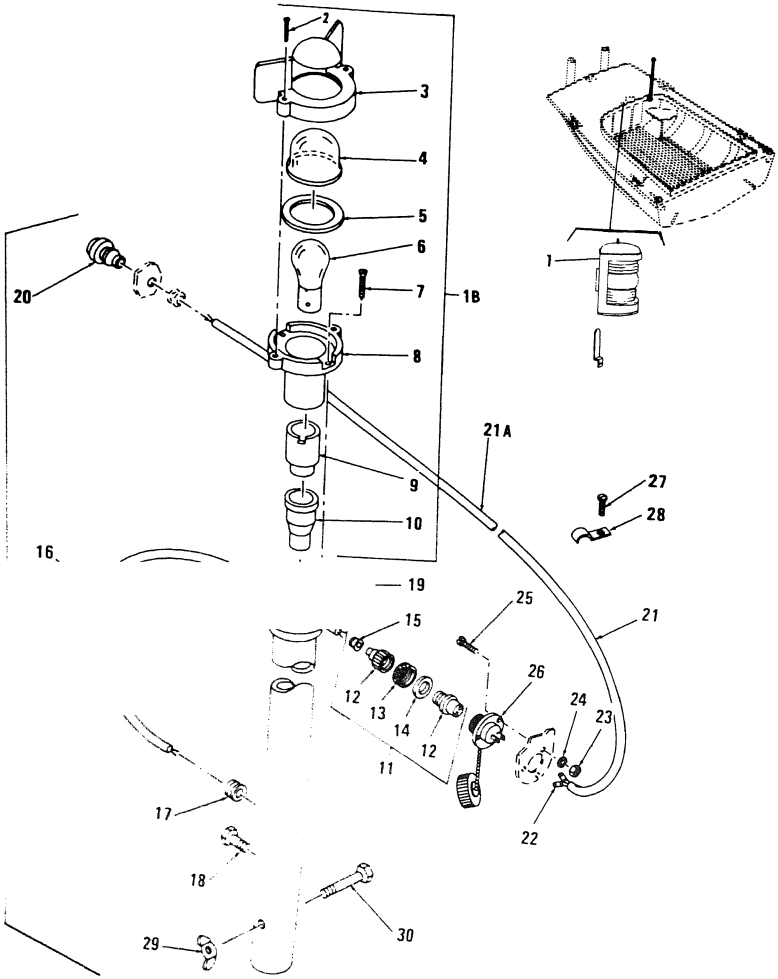

Figure 5. Bow Light

(1) ILLUSTRATION (a) FIG NO	(b) ITEM NO	(2) SMR CODE	(3) NATIONAL STOCK NUMBER	(4) FSCM	(5) PART NUMBER	(6) DESCRIPTION USABLE ON CODE	(7) U/M	(8) OT IN(IN UN
5	1	PAOZZ	6220-01-098-7503	97403	13213E5180-2	LIGHT AND MAST ASSE ASSEMBLY.....CCC,CUA	EA	1
5	1	PAOZZ	6220-01-104-0621	46576	FIG5-A C-2 GALV	LIGHT ASSY BOW.....CUB,CUC	EA	1
5	1B	PAOZZ	6220-00-839-7439	75977	FIG3893	.LIGHT,NAVIGATIONAL, BOW.....CCC,CUA	EA	1
5	2	XDOZZ		79577	5322-6	..SCREW,MACHINE RETAINER,LIGHT 0.540 X 3/8 IN.LG.....CCC,CUA	EA	2
5	3	XBOZZ		79577	3883-1	..RETAINER GLOBE,BOW LIGHT.....CCC,CUA	EA	1
5	4	PAOZZ	6220-00-838-0182	79577	3886-3	..GLOBE CLEAR,BOW LIGHT.....CCC,CUA	EA	1
5	5	PAOZZ	5330-00-835-1886	79577	3885-9	..GASKET GLOBE,BOW LIGHT.....CCC,CUA	EA	1
5	6	PAOZZ	6240-00-155-7795	96906	MS15584-15	..LAMP INCANDESCENT,BOW.....CCC,CUA	EA	1
5	7	PAOZZ	5305-00-770-2579	96906	MS51959-15	..SCREW,MACHINE BASE,BOW LIGHT.....CCC,CUA	EA	3
5	8	XAOZZ		79577	3892-1	..BASE LAMP,BOW LIGHT.....CCC,CUA	EA	1
5	9	XBOZZ	5305-00-770-2579	59577	42-002-25	..SOCKET LAMP,BOW LIGHT.....CCC,CUA	EA	1
5	10	PAOZZ	5975-00-284-9041	77060	5289527	..NIPPLE SOCKET,BOW LIGHT.....CCC,CUA	EA	1
5	11	XBOZZ	5935-00-089-0304	79577	FIG151	.PLUG CONNECTOR,BOW.....CCC,CUA	EA	1
5	12	XAOZZ		13445	M423	..PLUG, CONNECTOR, BOW LIGHT.....CCC,CUA	EA	1
5	13	XAOZZ		79577	151-1	..CAP PLUG,BOW LIGHT.....CCC,CUA	EA	1
5	14	XAOZZ		79577	151-3	..GASKET PLUG,BOW LIGHT.....CCC,CUA	EA	1
5	15	XAOZZ		79577	151-4	..GROMMET PLUG,BOW LIGHT.....CCC,CUA	EA	1
5	16	MOOZZ		97403	13213E5480	.CABLE ASSEMBLY SPEC SOCKET.....CCC,CUA	EA	1
5	16A	XBOZZ		81349	C0-02MOP2-16-03 35	..CABLE,ELECTRIC 5 FT REQUIRED.....CCC,CUA	RL	V
5	17	PAOZZ	5325-00-185-0004	96906	MS35489-4	GROMMET,NONMETALLIC POST,BOW LIGHT,3/8 ID X 5/8 GROOVE DIA X 1/8 IN.GROOVE WIDTH.....CCC,CUA	EA	1
5	18	PAOZZ	5305-00-478-0273	96906	MS35307-355	SCREW,CAP,HEXAGON HEAD.....CCC,CUA	EA	1
5	19	XBOZZ	2040-01-003-2372	97403	13213E5183	POST ASSEMBLY.....CCC,CUA	EA	1
5	20	XBOZZ	5935-00-089-0304	79577	FIG151	PLUG CONNECTOR.....CCC,CUA	EA	1
5	21	MOOZZ		97403	13213E5480	CABLE ASSEMBLY SPEC MANUFACTURE FROM.....CCC,CUA	EA	2
5	21A	XBOZZ		81349	C0-02MOP2-16-03 35	.CABLE,ELECTRIC 15 FT REQUIRED.....CCC,CUA	RL	V
5	22	PAOZZ		96906	MS25036-6	.TERMINAL LUGS.....CCC,CUA	EA	2
5	23	PAOZZ	5310-00-905-8451	96906	MS21083N06	NUT,SELF LOCKING.....CCC,CUA	EA	9
5	24	PAOZZ	5310-00-082-1404	96906	MS27183-6	WASHER,FLAT.....CCC,CUA	EA	6
5	25	PAOZZ	5305-00-958-5450	96906	MS35190-240	SCREW,MACHINE.....CCC,CUA	EA	6
5	26	PBOZZ		79577	FIG149	CONNECTOR,DECK.....CCC,CUA	EA	2
5	27	PAOZZ	5305-00-855-0957	96906	MS24629-46	SCREW,SELF TAPPING.....CCC,CUA	EA	4
5	28	PAOZZ	5340-00-827-2453	96906	MS35150-5	STRAP,RETAINING.....CCC,CUB	EA	4
5	29	PAOZZ	5310-00-889-2606	96906	MS35425-42	NUT,PLAIN WING,BOW LIGHT,3/8-16 IN.SCREW SIZE.....CCC,CUA	EA	1
5	30	PAOZZ	5305-00-269-3216	96906	MS90725-66	SCREW CAP,HEXAGON HEAD.....CCC,CUA	EA	1

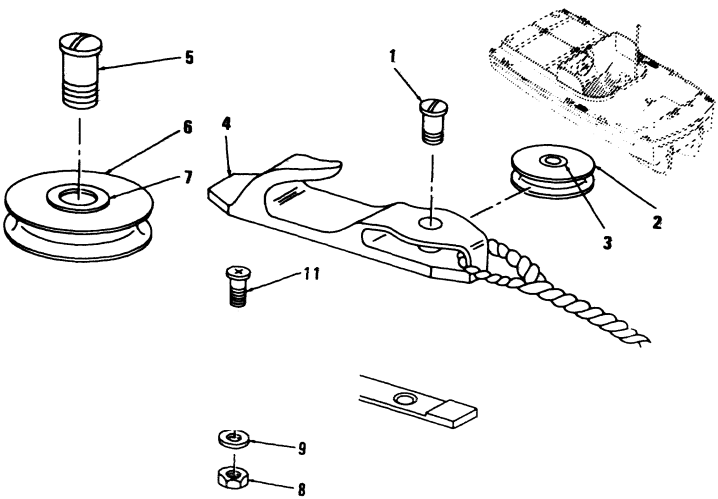

Figure 6. Towing Chock and Sheaves

(1) ILLUSTRATION (a) FIG NO	(b) ITEM NO	(2) SMR CODE	(3) NATIONAL STOCK NUMBER	(4) FSCM	(5) PART NUMBER	(6) DESCRIPTION USABLE ON CODE	(7) U/M	(8) QTY INC IN UNIT
						GROUP 02 TOWING ATTACHMENT AND ACCESSORY		
6	1	PAOZZ	5305-00-032-4080	97403	13213E5329-2	STUD,SHEAVE,HAUL CHOCK	EA	2
6	1	PAOZZ	5305-00-032-4057	97403	13213E5329-1	SCREW,MACHINE	EA	2
6	2	PAOZZ	3020-00-031-7596	97403	13213E5327	SHEAVE BASE HAUL CHOCK 2.50 DIA	EA	2
6	3	XBOZZ		97403	13213E5327-2	BUSHING,SHEAVE	EA	2
6	4	PAOZZ	2040-00-498-6238	97403	13213E5325	BASE,HAUL CHOCK	EA	1
6	5	PAOZZ		97403	13213E5328	STUD SHEAVE,ROLLER CHOCK	EA	2
6	6	PAOZZ	2040-00-889-5345	97403	13213E5326	ROLLER,CHOCK ROLLER CHOCK 2.75 DIA	EA	2
6	7	XAOZZ		71366	P62-9	BEARING,SLEEVE	EA	2
6	8	PAOZZ	5310-00-409-3701	96906	MS17828-5C	NUT,SELF LOCKING SLIDE,HAUL CHOCK,5/16-18 IN.THD SIZE SCREW.	EA	6
6	9	PAOZZ	5310-00-081-4219	96906	MS27183-12	WASHER,FLAT SLIDE,HAUL CHOCK,0.343 ID X 0.687 OD X 0.065 IN.THK	EA	6
6	10	XBOZZ		97403	13213E5316	SPACER,SLIDE,HAUL CHOCK	EA	6
6	11	PAOZZ	5305-00-959-2722	96906	MS35190-308	SCREW,MACHINE SLIDE,HAUL CHOCK,5/16-18 X 1 1/2 IN.LG	EA	6
6	12	PBOZZ	2040-00-997-6045	97403	13213E5335	SLIDE HAUL CHOCK,BASE	EA	2

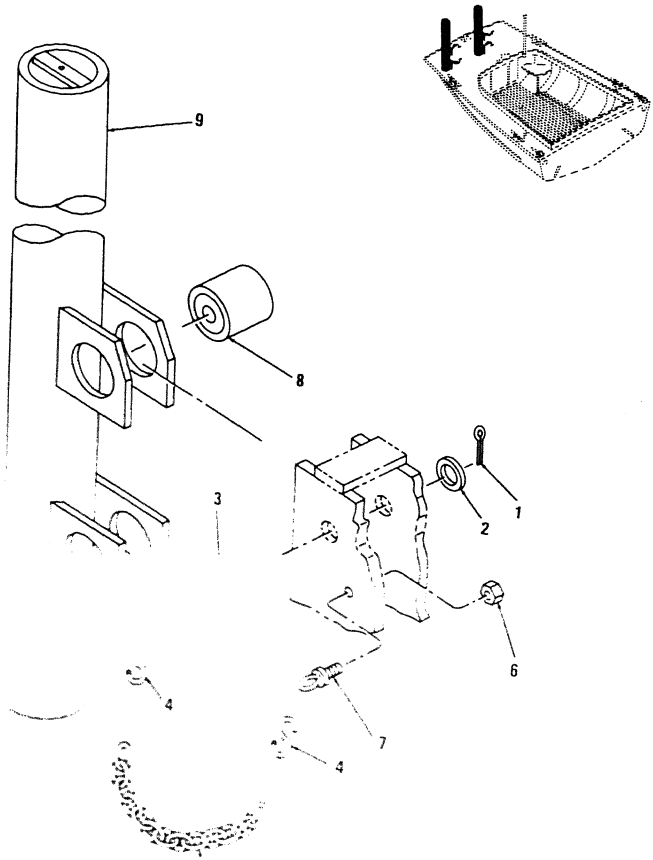

Figure 1 Pack Knee (Sheet 1 of 2)

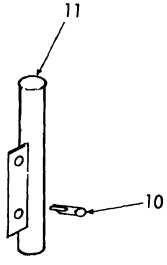

Figure 7 **Push Knees.** (Sheet 2 of 2)

ILLUSTRATION (a) FIG NO	(b) ITEM NO	SMR CODE	NATIONAL STOCK NUMBER	FSCM	PART NUMBER	DESCRIPTION USABLE ON CODE	U/M	QTY INC IN UNIT
7	1	PAOZZ	5315-00-241-7332	96906	MS24665-374	PIN,COTTER PUSHING KNEE.....CCC,CUA	EA	4
7	2	PAOZZ	5310-00-809-8541	96906	MS27183-27	WASHER,PLAT PUSHING KNEE.....CCC,CUA	EA	4
7	3	PAOZZ	2040-00-008-9796	97403	13216E6684	PIN, PUSHING KNEE A PUSHING KNEE ASSEMBLY.....CCC,CUA	EA	4
7	4	XAOZZ		96906	MS87006-63	LINK,CHAIN.....CCC,CUA	EA	8
7	5	XAOZZ		97403	13216E6684-4	CHAIN.....CCC,CUA	EA	4
7	6	XAOZZ		96906	MS16228-1	NUT,SELF LOCKING.....CCC,CUA	EA	4
7	8	PAOZZ	2040-00-450-1550	97403	13216E6683	BUSHING PUSHING KNEE.....CCC,CUA	EA	4
7	9	PAOZZ	2040-00-484-5725	97403	13216E6685	KNEE,PUSHING.....CCC,CUA	EA	2
7	10	PAOZZ	2040-00-353-4928	97403	13222E7259	.PIN TOGGLE.....CUB,CUC	EA	2
7	11	PAOZZ	2040-00-353-4925	97403	13222E7258	.KNEE PUSHING.....CUB,CUC	EA	1

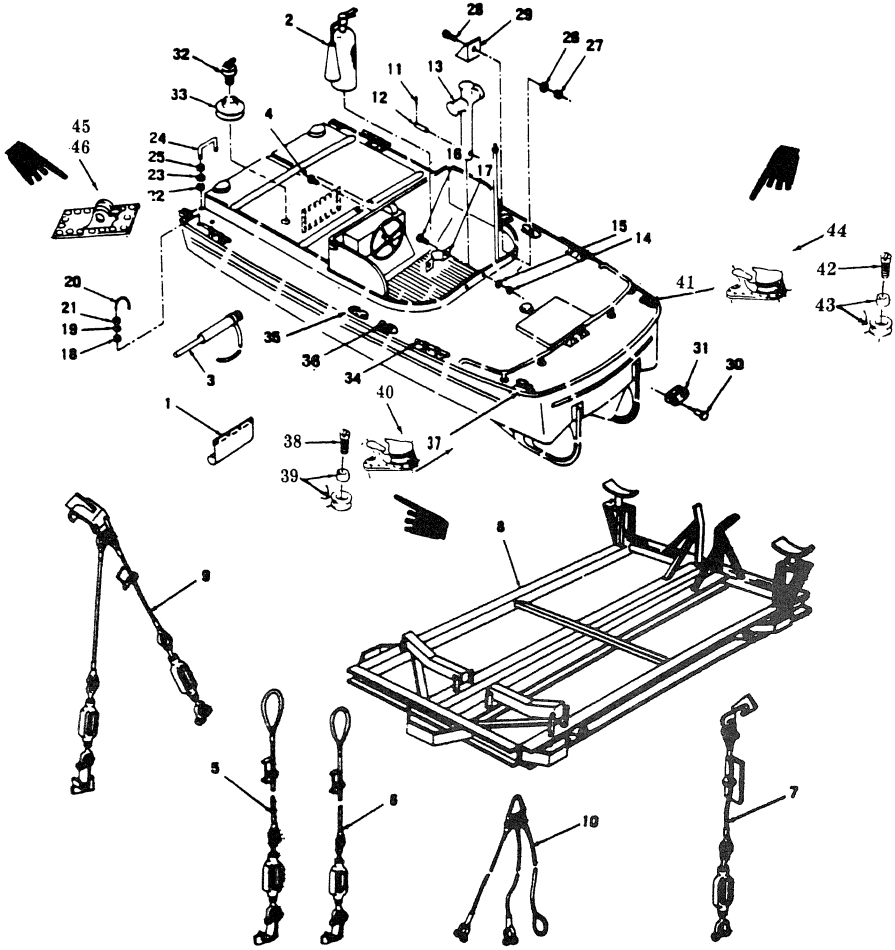

Figure 8. Stern Section Fittings, On-Board Equipment and Cradle

(1) ILLUSTRATION (a) FIG. NO.	(b) ITEM NO.	(2) SMR CODE	(3) NATIONAL STOCK NUMBER	(4) FSCM	(5) PART NUMBER	(6) DESCRIPTION USABLE ON CODE	(7) U/M	(8) QTY INC IN UNIT
8	1	PAOZZ	2090-00-997-6050	97403	13213E5474	COVER, INSTRUMENT PA	EA	1
8	2	PAOZF	4210-00-270-4512	81349	02910	EXTINGUISHER FIRE	EA	1
8	3	PAOZZ	4320-00-775-3793	97403	13220E4451	PUMP, RECIPROCATING, HAND OIL	EA	1
8	4	XBOZZ	5325-00-189-9860	81349	MILF55591TYPE2STY LE2SIZE5	STUD ASSY ACCESS PANEL CCC	EA	20
8	5	PAOZZ	2020-00-997-6038	97403	13213E5487	CABLE ASSEMBLY, PORT, STERN	EA	1
8	6	PAOZZ	2020-00-997-6037	97403	13213E5488	CABLE ASSEMBLY STBD, STERN	EA	1
8	7	PAOZZ	2020-00-989-3271	97403	13213E5485	CABLE ASSEMBLY STERN	EA	2
8	8	XBOZZ	2090-00-620-5525	97403	13213E5490	CRADLE, BOAT	EA	1
8	9	PAOZZ	2020-00-997-6036	97403	13213E5492	CABLE ASSEMBLY TIE DOWN ASSY, STBD	EA	1
8	9	PAOZZ	2020-00-997-6035	97403	13213E5491	CABLE ASSEMBLY TIE DOWN ASS, PORT	EA	1
8	10	PAOZZ	2020-00-997-6034	97403	13213E5208	SLING, MULTIPLE LEG STERN LIFTING	EA	1
8	11	PAOZZ	5315-00-839-5822	96906	MS24665-353	PIN, COTTER LOCK BAR	EA	2
8	12	XBOZZ		97403	13213E5346	BAR, LOCK TOWING BITT	EA	1
8	13	XBOZZ		97403	13213E5348	BITT, TOWING, STERN	EA	1
8	14	PAOZZ	5310-00-245-3504	96906	MS17828-8C	NUT SELF-LOCKING, CLAMP TOWING BITT	EA	6
8	15	PAOZZ	5310-00-167-0823	88044	AN960-816	WASHER, FLAT CLAMP TOWING BITT	EA	6
8	16	PAOZZ	5305-00-964-0589	96906	MS90725-115	SCREW CAP, HEXAGON, CLAMP TOWING BITT	EA	6
8	17	XBOZZ		97403	13213E5347	CLAMP TOWING BITT	EA	1
8	18	PAOZZ	5310-00-956-3150	96906	MS17828-14F	NUT SELF LOCKING, HEXAGON, 7/8-14 IN	EA	4
8	19	PAOZZ	5310-00-809-8540	96906	MS27183-25	WASHER, FLAT U-BOLT, 0.938 X 1.750 X 0.134 IN	EA	8
8	20	XBOZZ		97403	13213E5283-3	U-BOLT	EA	1
8	21	PAOZZ	5310-00-942-5183	96906	MS21083N14	NUT, SELF LOCKING HEXAGON, U-BOLT, 7/8-14 IN	EA	4
8	22	PAOZZ	5310-00-031-0919	96906	MS17828-10F	NUT, SELF LOCKING HEXAGON, BAR LIFTING, 5/8-18 IN	EA	4
8	23	PAOZZ	5310-00-823-8803	96906	MS27183-21	WASHER, FLAT BAR LIFTING 0.656 X 1.312 X 0.095 IN	EA	8
8	24	XBOZZ		97403	13213E5282	BAR, LIFTING	EA	2
8	25	PAOZZ	5310-00-925-9642	96906	MS21083N10	NUT, HEXAGON BAR LIFTING	EA	4
8	26	PAOZZ	5310-00-701-5786	96906	MS17828-6C	NUT, SELF LOCKING HEXAGON, 3/8-16 IN	EA	1
8	27	PAOZZ	5310-00-080-6004	96906	MS27183-14	WASHER, FLAT COCKPIT STEP, 0.416 X 0.812 X 0.065 IN. LG	EA	1
8	28	PAOZZ	5305-00-984-5691	96906	MS35206-311	SCREW, MACHINE COCKPIT STEP, 3/8-16 X 1 IN. LG	EA	1
8	29	XBOZZ	2040-00-212-7859	97403	13213E5191	STEP, COCKPIT	EA	1
8	30	PAOZZ	5315-00-835-1948	97403	13213E5338	PIN, TOGGLE	EA	2
8	31	PAOZZ	2040-00-575-4787	97403	13213E5336	YOKE, CONNECTOR, BOW	EA	1
8	32	PAOZZ	5340-00-163-4713	97403	13213E5373	DRAIN PLUG STERN	EA	1
8	34	PAOZZ	2040-00-989-3268	97403	13213E5334	BASE, CLEAT	EA	8
8	36	XDOZZ		97403	13213E5332	CHOCK ASSY, HAUL BASE	EA	2
8	37	XDOZZ		97403	13213E5500	CHOCK ASSY, ROLLER PORT	EA	1
8	38	PAOZZ		97403	13213E5328	.STUD, SHEAVE	EA	1
8	39	PAOZZ	2040-00-889-5345	97403	13213E5326	.SHEAVE AND BUSHING	EA	1
8	40	PAOZZ	2040-00-498-6237	97403	13213E5353	.ROLLER, CHOCK PORT	EA	1
8	41	XDOZZ		97403	13213E5330	CHOCK ASSY, ROLLER STED	EA	1
8	42	PAOZZ		97403	13213E5328	.STUD, SHEAVE	EA	1
8	43	PAOZZ	2040-00-889-5345	97403	13213E5326	.SHEAVE AND BUSHING	EA	1
8	44	PAOZZ	2040-00-498-6239	97403	13213E5324	.ROLLER, CHOCK PORT	EA	1

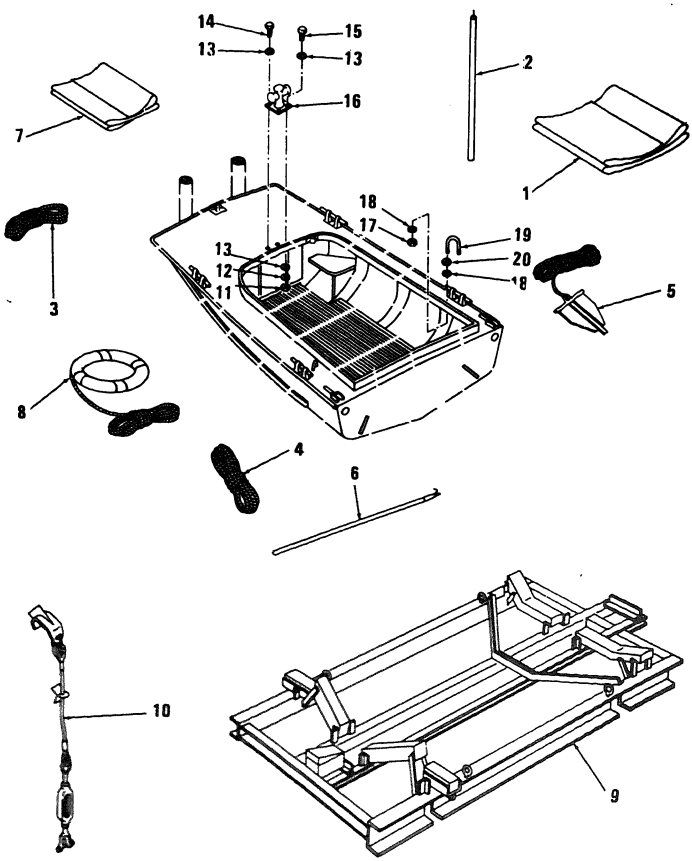

Figure 9. Bow Section Fittings, On-Board Equipment and Cradle

(1) ILLUSTRATION (a) FIG NO	(b) ITEM NO	(2) SMR CODE	(3) NATIONAL STOCK NUMBER	(4) FSCM	(5) PART NUMBER	(6) DESCRIPTION USABLE ON CODE	(7) U/M	(8) QTY INC IN UNIT
8	1	PAOZZ	2090-00-997-6050	97403	13213E5474	COVER,INSTRUMENT PA	EA	1
8	2	PAOZF	4210-00-270-4512	81349	02910	EXTINGUISHER FIRE	EA	1
8	3	PAOZZ	4320-00-775-3793	97403	13220E4451	PUMP,RECIPROCATING RECIPROCATING,HAND OIL	EA	1
8	4	XBOZZ	5325-00-189-9860	81349	MILF5591TYPE2STY LE2SIZE5	STUD ASSY ACCESS PANEL CCC	EA	20
8	5	PAOZZ	2020-00-997-6038	97403	13213E5487	CABLE ASSEMBLY PORT,STERN	EA	1
8	6	PAOZZ	2020-00-997-6037	97403	13213E5488	CABLE ASSEMBLY STBD,STERN	EA	1
8	7	PAOZZ	2020-00-989-3271	97403	13213E5485	CABLE ASSEMBLY STERN	EA	2
8	8	XBOZZ	2090-00-620-5525	97403	13213E5490	CRADLE,BOAT	EA	1
8	9	PAOZZ	2020-00-997-6036	97403	13213E5492	CABLE ASSEMBLY TIE DOWN ASSY,STBD	EA	1
8	9	PAOZZ	2020-00-997-6035	97403	13213E5491	CABLE ASSEMBLY TIE DOWN ASS,PORT	EA	1
8	10	PAOZZ	2020-00-997-6034	97403	13213E5208	SLING,MULTIPLE LEG STERN LIFTING	EA	1
8	11	PAOZZ	5315-00-839-5822	96906	MS24665-353	PIN,COTTER LOCK BAR	EA	2
8	12	XBOZZ		97403	13213E5346	BAR,LOCK TOWING BITT	EA	1
8	13	XBOZZ		97403	13213E5348	BITT TOWING,STERN	EA	1
8	14	PAOZZ	5310-00-245-3504	96906	MS17828-8C	NUT SELF-LOCKING,CLAMP TOWING BITT	EA	6
8	15	PAOZZ	5310-00-167-0823	88044	AN960-816	WASHER,FLAT CLAMP TOWING BITT	EA	6
8	16	PAOZZ	5305-00-964-0589	96906	MS90725-115	SCREW CAP,HEXAGON,CLAMP TOWING BITT	EA	6
8	17	XBOZZ		97403	13213E5347	CLAMP TOWING BITT	EA	1
8	18	PAOZZ	5310-00-956-3150	96906	MS17828-14F	NUT SELF LOCKING,HEXAGON,7/8-14 IN	EA	4
8	19	PAOZZ	5310-00-809-8540	96906	MS27183-25	WASHER,FLAT U-BOLT,0.938 X 1.750 X 0.134 IN	EA	8
8	20	XBOZZ		97403	13213E5283-3	U-BOLT	EA	1
8	21	PAOZZ	5310-00-942-5183	96906	MS21083N14	NUT,SELF LOCKING HEXAGON,U-BOLT,7/8-14 IN	EA	4
8	22	PAOZZ	5310-00-031-0919	96906	MS17828-10F	NUT,SELF LOCKING HEXAGON,BAR LIFTING,5/8-18 IN	EA	4
8	23	PAOZZ	5310-00-823-8803	96906	MS27183-21	WASHER,FLAT BAR LIFTING 0.656 X 1.312 X 0.095 IN	EA	8
8	24	XBOZZ		97403	13213E5282	BAR,LIFTING	EA	2
8	25	PAOZZ	5310-00-925-9642	96906	MS21083N10	NUT,HEXAGON BAR LIFTING	EA	4
8	26	PAOZZ	5310-00-701-5786	96906	MS17828-6C	NUT,SELF LOCKING HEXAGON,3/8-16 IN	EA	1
8	27	PAOZZ	5310-00-080-6004	96906	MS27183-14	WASHER,FLAT COCKPIT STEP,0.416 X 0.812 X 0.065 IN.LG	EA	1
8	28	PAOZZ	5305-00-984-5691	96906	MS35206-311	SCREW,MACHINE COCKPIT STEP,3/8-16 X 1 IN.LG	EA	1
8	29	XBOZZ	2040-00-212-7859	97403	13213E5191	STEP,COCKPIT	EA	1
8	30	PAOZZ	5315-00-835-1948	97403	13213E5338	PIN,TOGGLE	EA	2
8	31	PAOZZ	2040-00-575-4787	97403	13213E5336	YOKE,CONNECTOR,BOW	EA	1
8	32	PAOZZ	5340-00-163-4713	97403	13213E5373	DRAIN PLUG STERN	EA	1
8	34	PAOZZ	2040-00-989-3268	97403	13213E5334	BASE,CLEAT	EA	8
8	36	XDOZZ		97403	13213E5332	CHOCK ASSY, HAUL BASE	EA	2
8	37	XDOZZ		97403	13213E5500	CHOCK ASSY, ROLLER PORT	EA	1
8	38	XDOZZ		97403	13213E5330	CHOCK ASSY,ROLLER STBD	EA	1

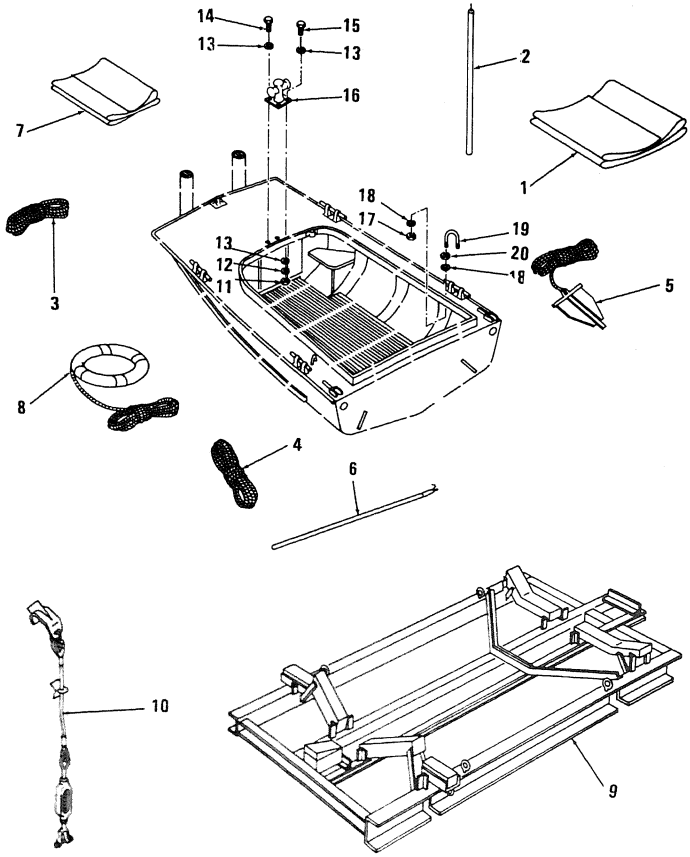

Figure 9. Bow Section Fittings, On-Board Equipment and Cradle

(1) ILLUSTRATION (a) FIG NO	(b) ITEM NO	(2) SMR CODE	(3) NATIONAL STOCK NUMBER	(4) FSCM	(5) PART NUMBER	(6) DESCRIPTION USABLE ON CODE	(7) U/M	(8) QTY INC IN UNIT
9	1	PAOZZ	2090-00-997-2049	97403	13213E5374	COVER,FORWARD WALKW FORWARD WALKWAY	EA	1
9	2	PAOZZ	2090-00-368-8194	97403	13213E5376	POLE ASSEMBLY,SUPPO	EA	1
9	3	PAOZZ	2030-00-997-6041	97403	13213E5510	LINE,STEERING	EA	2
9	4	PAOZZ	4020-00-033-4735	97403	13213E5511	FIBER ROPE ASSEMBLY	EA	4
9	5	PAOZZ	2040-00-997-6047	97403	13213E5513	ANCHOR AND ANCHOR LINE ASSEMBLY	EA	1
9	6	PAOZZ	2040-00-007-1136	97403	13216E9929	HOOK,BOAT	EA	1
9	7	PAOZZ	2090-00-997-6048	97403	13213E5375	COVER,COCKPIT	EA	1
9	8	PAOZZ	4220-00-275-3156	97403	13213E5468	RING,BUOY	EA	1
9	9	XBOZZ	2090-00-620-5524	97403	13213E5445	CRADLE,BOAT	EA	1
9	10	PAOZZ	2020-00-997-6033	97403	13213E5484	CABLE ASSEMBLY TIE DOWN ASSY,BOW	EA	4
9	11	PAOZZ	5310-00-768-0318	96906	MS51967-14	NUT HEXAGON,TOWING BITT	EA	4
9	12	PAOZZ	5310-00-584-5272	96906	MS35338-48	WASHER,LOCK TOWING BITT	EA	4
9	13	PAOZZ	5310-00-809-5998	96906	MS27183-18	WASHER,FLAT	EA	8
9	14	XDOZZ	5305-00-071-1770	96906	MS90725-116	SCREW,MACHINE	EA	2
9	15	PAOZZ	5305-00-050-1077	96906	MS90725-118	SCREW,MACHINE	EA	2
9	16	XBOZZ		79577	M3555-1-1-2	BITT TOWING,BOW	EA	1
9	17	XBOZZ		96906	MS172829-10C	NUT SELF-LOCKING HEXAGON,U-BOLT	EA	4
9	18	PAOZZ	5310-00-823-8803	96906	MS27183-21	WASHER,FLAT U-BOLT,0.656 X 1.312 X 0.095 IN	EA	8
9	19	XBOZZ		97403	13213E5283-1	U-BOLT	EA	2
9	20	PAOZZ	5310-00-763-8920	96906	MS51967-20	NUT,PLAIN,HEXAGON HEXAGON,U-BOLT,5/8-11 IN	EA	4
9	21	PAOZZ	2040-00-294-1263	97403	13213E5333	CHOCK,BOW	EA	4

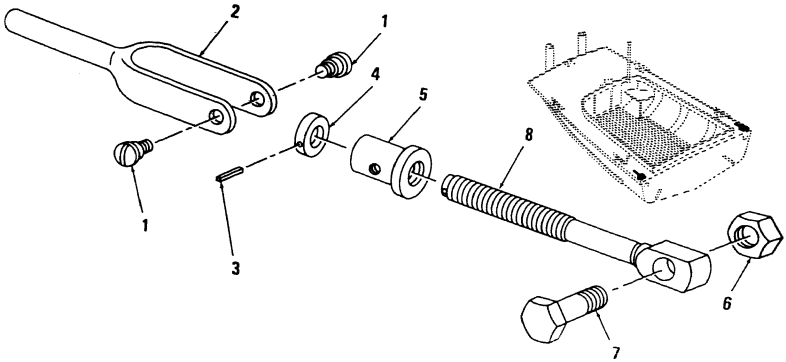

Figure 10. Coupling Arm

(1) ILLUSTRATION (a) FIG NO	(b) ITEM NO	(2) SMR CODE	(3) NATIONAL STOCK NUMBER	(4) FSCM	(5) PART NUMBER	(6) DESCRIPTION USABLE ON CODE	(7) U/M	(8) QTY INC IN UNIT
10	1	PAOZZ	5305-00-835-1957	97403	13213E5279	SCREW SHOULDER,COUPLING HANDLE.....	EA	4
10	2	PAOZZ	2040-00-997-6046	97403	13213E5277	HANDLE,COUPLING.....	EA	2
10	3	XBOZZ		96906	MS171536	PIN,SPRING COUPLING COLLAR MTG,0.125 X 1.250 IN.LG.....	EA	2
10	4	PAOZZ	3040-00-212-7928	97403	13213E5281	COLLAR,SHAFT.....	EA	2
10	5	PAOZZ	5310-00-353-4828	97403	13213E5278	NUT,PLAIN,ROUND.....	EA	2
10	6	PAOZZ	5310-00-956-3150	96906	MS17828-14F	NUT,SELF LOCKING COUPLING MTG SCREW,7/8-14 IN.....	EA	2
10	7	XDOZZ	5305-00-958-8461	96906	MS90726-215	SCREW,CAP COUPLING MTG,7/8-14 X 3-1/2 IN.LG.....	EA	2
10	8	PAOZZ	5306-00-835-1918	97403	13213E5276	BOLT,EYE COUPLING.....	EA	2

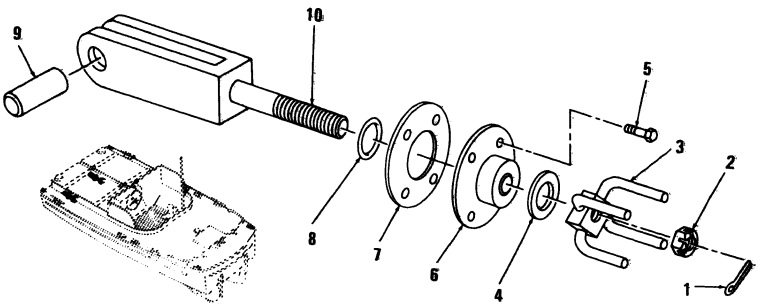

Figure 11. Coupling Yoke

(1) ILLUSTRATION (a) FIG NO	(b) ITEM NO	(2) SMR CODE	(3) NATIONAL STOCK NUMBER	(4) FSCM	(5) PART NUMBER	(6) DESCRIPTION USABLE ON CODE	(7) U/M	(8) QTY INC IN UNIT
11	1	PAOZZ	5315-00-013-7258	96906	MS24665-497	PIN,COTTER COUPLING YOKE NUT, 3/16 x 1-3/4 IN.LG.....	EA	2
11	2	XBOZZ		96906	13216E6806	NUT,RETAINING YOKE ADJUSTING.....	EA	2
11	3	XBOZZ		97403	13213E5262	NUT YOKE ADJUSTING,COUPLING YOKE.....	EA	2
11	4	XDOZZ	5310-00-233-7728	97403	13213E5270	WASHER,FLAT COUPLING YOKE NUT.....	EA	2
11	5	PAOZZ	5306-00-225-8499	96906	MS90725-34	SCREW,CAP PACKING RETAINER MTG,5/16-18 X 1 IN.LG.....	EA	4
11	6	XBOZZ		97403	13213E5260	RETAINER PACKING,ADJUSTING YOKE.....	EA	2
11	7	PAOZZ	5330-00-061-0549	97403	13213E5385	GASKET RETAINER PACKING.....	EA	2
11	8	PAOZZ	5330-00-198-6176	38044	AN6227-20	PACKING.PREFORMED COUPLING YOKE,1-1/16 X 1-5/16 X 1/8 IN.THK	EA	2
11	9	XBOZZ		97403	13213E5263	PIN,YOKE.....	EA	2
11	10	XBOZZ		97403	13213E5261	YOKE,COUPLING.....	EA	2

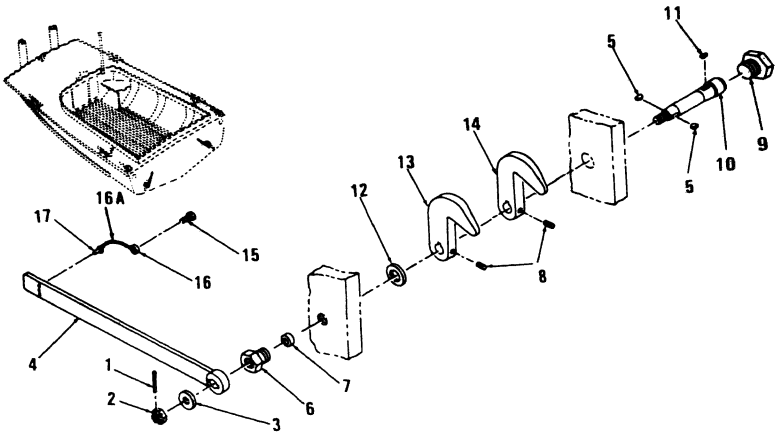

Figure 12. Coupling Hook

(1) ILLUSTRATION (a) FIG NO	(b) ITEM NO	(2) SMR CODE	(3) NATIONAL STOCK NUMBER	(4) FSCM	(5) PART NUMBER	(6) DESCRIPTION USABLE ON CODE	(7) U/M	(8) QTY INC IN UNIT
12	1	PAOZZ	5315-00-298-1481	96906	MS24665-357	PIN,COTTER HOOK HANDLE NUT,1/8 IN.DIA X 1-1/2 IN.LG.....	EA	2
12	2	PAOZZ	5310-00-998-0608	96906	MS35692-61	NUT,SLOTTED HEXAGON SHAFT HOOK,3/4-16 IN.....	EA	2
12	3	PAOZZ	5310-00-809-8533	96906	MS27183-23	WASHER,FLAT SHAFT HOOK,0.812 IN.ID X 1.469 IN.OD X 0.134 IN.THK.....	EA	2
12	4	XBOZZ	3040-00-304-3368	97403	13213E5267	LEVER,MANUAL CONTRO HOOK,SHAFT.....	EA	2
12	5	PAOZZ	5315-00-616-5522	96906	MS35756-12	KEY,WOODRUFF HANDLE HOOK,3/16 X 3/4 IN.....	EA	2
12	6	XBOZZ		97403	13213E5266	NUT,PACKING.....	EA	1
12	7	PAOZZ	5330-00-839-1749	97403	13213E5172-37	PACKING 1/4 IN.DIA.....	EA	2
12	8	PAOZZ	5305-00-724-5834	96906	MS51963-87	SETSCREW,HEXAGON PORT COUPLING HOOK,5/16-18 X 3/4 IN.LG....	EA	2
12	9	PAOZZ	5365-01-091-4044	97403	13213E5259	PLUG,HOUSING.....	EA	1
12	10	PAOZZ	2040-00-997-9764	97403	13213E5268	SHAFT,HOOK,STARBOAR.....	EA	2
12	11	PAOZZ	5315-00-616-5527	96906	MS35756-18	KEY,WOODRUFF PORT COUPLING.....	EA	2
12	12	XBOZZ		97403	13213E5271	WASHER HOOK SHAFT.....	EA	2
12	13	PAOZZ	2040-00-989-3267	97403	13213E5264	HOOK,COUPLING COUPLING,STARBOARD.....	EA	1
12	14	PAOZZ	2040-00-374-2749	97403	13213E5265	HOOK,COUPLING,PORT COUPLING,PORT.....	EA	1
12	15	PAOZZ	5305-00-984-6193	96906	MS35206-245	SCREW,MACHINE.....	EA	2
12	16	MOOZZ		81349	RRC271TYPE2	CHAIN SINGLE JACK MANUFACTURE FROM.....	EA	2
12	16A	PAOZZ	4010-00-262-1551	80244	42C14155-1	.CHAIN,WELDLESS 6 IN.....	FT	V
12	17	PAOZZ	5340-00-097-4258	96906	MS17988-516	PIN QUICK RELEASE.....	EA	2

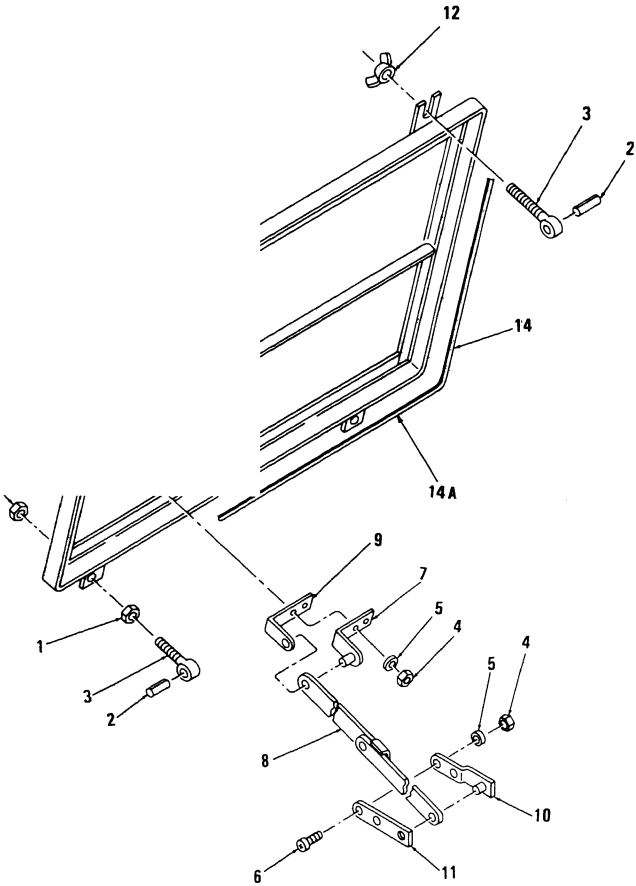

Figure 13. Stern Hatch Cover

(1) ILLUSTRATION (a) FIG NO.	(b) ITEM NO.	(2) SMR CODE	(3) NATIONAL STOCK NUMBER	(4) FSCM	(5) PART NUMBER	(6) DESCRIPTION USABLE ON CODE	(7) U/M	(8) QTY INC IN UNIT
						GROUP 03 ACCESS AND HATCH COVER		
13	1	PAOZZ	5310-00-701-5786	96906	MS17828-6C	NUT,SELF LKG HEXAGON,HATCH COVER,STERN,3/8-16 IN.THD SIZE BOLT.....	EA	4
13	2	PAOZZ	5315-00-597-3693	96906	MS171648	PIN,SPRING STERN HATCH COVER,0.250 DIA X 0.625 IN.LG.....	EA	8
13	3	XBOZZ	5306-00-834-8533	96906	13213E5189-2	BOLT,DROP STERN HATCH COVER,3/8-16 IN.THD SIZE.....	EA	8
13	4	XBOZZ	5310-00-483-8792	96906	M24129-2-4C	NUT,SELF LKG HEXAGON,HINGE PLATES,STERN HATCH COVER,1/4-20 IN.SCREW SIZE.....CCC	EA	4
13	5	PAOZZ	5310-00-809-4058	96906	MS27183-10	WASHER,FLAT RD HD,HINGE PLATES,STERN HATCH COVER,0.281 ID X 0.625 OD X 0.065 IN.THK.....	EA	4
13	6	PAOZZ	5305-00-988-1726	MS35206-282		SCREW,MACHINE PAN HEAD,HINGE PLATES,STERN HATCH COVER,1/4-20 X 7/8 IN.....	EA	4
13	7	XBOZZ		97403	13213E5194	PLATE HINGE,STERN HATCH COVER.....	EA	1
13	8	PAOZZ	5340-00-041-2443	97403	13213E5203	BRACE HINGE PLATE,STERN HATCH.....	EA	1
13	9	PBOZZ		97403	13213E5195	PLATE HINGE,STERN HATCH COVER.....	EA	1
13	10	XBOZZ		97403	13213E5196	PLATE HINGE,STERN HATCH COVER.....	EA	1
13	11	PBOZZ		97403	13213E5197	PLATE HINGE,STERN HATCH COVER.....	EA	1
13	12	PAOZZ	5310-00-889-2606	96906	MS35425-42	NUT,WING,PLAIN STERN HATCH COVER,3/8-16 IN.BOLT SIZE.....	EA	2
13	13	XBOZZ	2040-00-374-2724	97403	13213E5178	COVER,STERN HATCH HATCH,STERN.....	EA	1
13	14	MOOZZ		97403	13212E5178-5	.GASKET,COVER STERN HATCH MANUFACTURE FROM.....	EA	1
13		XDOZZ	9320-00-900-6746	81349	MILR6130TYPE1	..RUBBER 3/16 IN.THK,3/4 IN.WIDE,50 FT LONG.....	RL	1

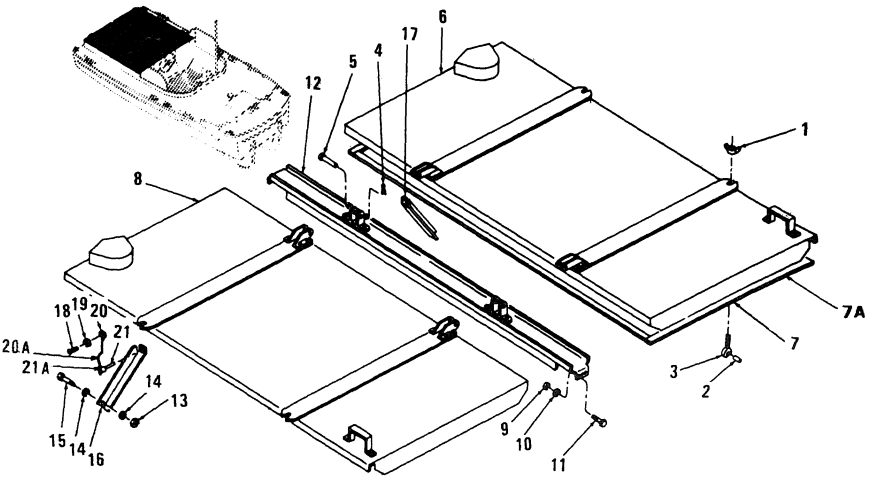

Figure 14. Engine Hatch Covers

(1) ILLUSTRATION (a) FIG NO.	(b) ITEM NO	(2) SMR CODE	(3) NATIONAL STOCK NUMBER	(4) FSCM	(5) PART NUMBER	(6) DESCRIPTION USABLE ON CODE	(7) U/M	(8) QTY INC IN UNIT
14	1	PAOZZ	5310-00-889-2606	96906	MS35425-42	NUT,WING DROP BOLT,3/8-16 IN.	EA	4
14	2	PAOZZ	5315-00-597-3693	96906	MS171648	PIN,SPRING DROP BOLT,0.250 IN.DIA X 0.625 IN.LG.	EA	4
14	3	PAOZZ	5306-00-834-8533	97403	13213E5189-2	BOLT,MACHINE DROP,ENGINE COVER MTG.	EA	4
14	4	PAOZZ	5315-00-816-1794	96906	MS24665-285	PIN,COTTER 0.094 IN.X 1 IN.LG.	EA	2
14	5	PAOZZ	5315-00-903-5931	96906	MS20392-5C63	PIN,STRAIGHT,HEADED STRAIGHTHEADED,ENGINE COVER MTG,3/8 X 1-31/32 IN.LG.	EA	2
14	6	XBOZZ		97403	13219E1162	COVER ENGINE HATCH,PORT	EA	2
14	7	MOOZZ		97403	13219E1161-13	.GASKET COVER,ENGINE HATCH PORT AND STBD MANUFACTURE FROM..	EA	2
14	7A	XDOZZ	9320-00-900-6746	81349	MILR6130TYPE1	..RUBBER 3/16 IN.THK,3/4 IN.WIDE,50 FT LONG.	RL	2
14	8	XBOZZ		87403	13219E1161	COVER ENGINE HATCH,STARBOARD COMPONENTS SAME AS COVER PART NO. 13213E1162 (97403).	EA	2
14	9	PAOZZ	5310-00-031-0920	96906	MS17828-4C	NUT,SELF LOCKING HATCH COVER SUPPORT SCREW,1/4-20 IN.	EA	6
14	10	PAOZZ	5310-00-809-4058	96906	MS27183-10	WASHER,FLAT HATCH COVER SUPPORT SCREW,0.281 X 0.625 X 0.065 IN.THK.	EA	6
14	11	XBOZZ	5305-00-068-0502	97403	MS90725-6	SCREW,CAP HEXAGON HEAD HATCH COVER SUPPORT MTG,1/4-20 X 3/4 IN.	EA	6
14	12	XBOZZ		97403	13213E5205	SUPPORT ENGINE HATCH COVER.	EA	6
14	13	PAOZZ	5310-00-409-3701	96906	MS17828-5C	NUT,SELF LOCKING ENGINE HATCH SUPPORT,5/16-18 IN.	EA	7
14	14	PAOZZ	5310-00-081-4219	96906	MS27183-12	WASHER,FLAT ENGINE HATCH COVER SUPPORT,0.344 X 0.688 C 0.065 IN.	EA	14
14	15	PAOZZ	5306-00-225-8499	96906	MS90725-34	SCREW,CAP ENGINE HATCH COVER SUPPORT MTG,5/16-18 X 1 IN.LG.	EA	7
14	16	XBOZZ		97403	13213E5192	SUPPORT ENGINE HATCH COVER,STBD.	EA	2
14	17	XBOZZ		97403	13213E5193	SUPPORT ENGINE HATCH COVER,PORT.	EA	2
14	18	PAOZZ	5305-00-989-7435	96906	MS35207-264	SCREW,MACHINE SINGLE JACK CHAIN MTG,10-32 X 5/8 IN.LG.	EA	4
14	19	PAOZZ	5310-00-809-8546	96906	MS27183-8	WASHER,FLAT SINGLE JACK CHAIN,0.219 X 0.438 X 0.049 IN.	EA	4
14	20	MOOZZ		81349	RRC271TYPEII	CHAIN,SINGE JACK 0.062 MANUFACTURE FROM.	EA	4
14	20A	PAOZZ	4010-00-262-1551	80244	42C14155-1	.CHAIN WELDLESS 6 IN.REQUIRED.	FT	V
14	21	PAOZZ	5340-00-019-9512	96906	MS17988C620	PIN,QUICK RELEASE ENGINE COVER TO SUPPORT,3/8 X 2 IN.LG.	EA	4
14	21A	PAOZZ	5320-00-245-4360	96906	MS20470B6-14	.RIVET,SOLID,BRACKET.	EA	8

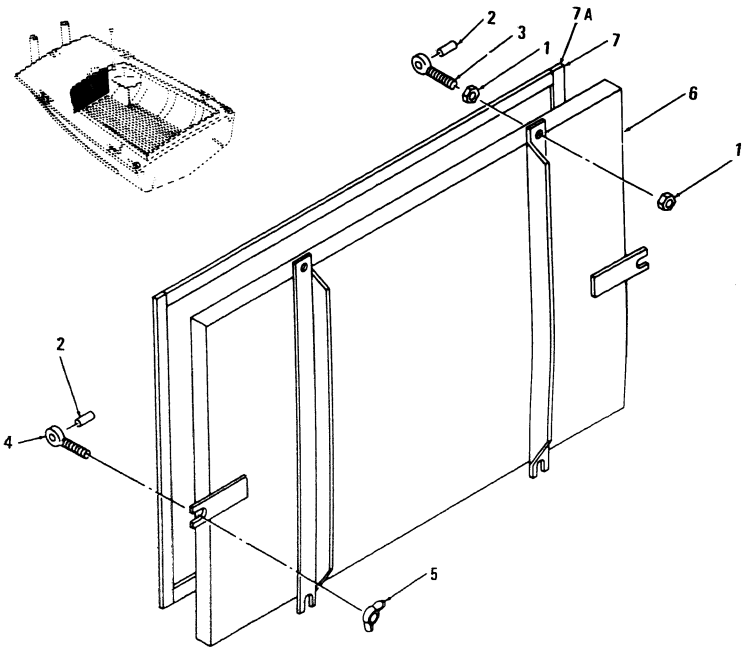

Figure 15. Bow Hatch Cover

(1) ILLUSTRATION (a) FIG NO	(b) ITEM NO	(2) SMR CODE	(3) NATIONAL STOCK NUMBER	(4) FSCM	(5) PART NUMBER	(6) DESCRIPTION USABLE ON CODE	(7) U/M	(8) QTY INC IN UNIT
15	1	PAOZZ	5310-00-701-5786	96906	MS17828-6C	NUT,SELF LOCKING BOW HATCH COVER MTG,3/8-16 IN.....	EA	4
15	2	PAOZZ	5315-00-844-0342	96906	MS16562-250	PIN,SPRING DROP BOLT MTG,0.250 C 0.750 IN.LG.....	EA	6
15	3	XBOZZ		97403	13213E5189-1	BOLT,DROP BOW HATCH COVER.....	EA	2
15	4	XBOZZ	5306-00-834-8533	97403	13213E5189-2	BOLT,EYE BOW HATCH COVER.....	EA	4
15	5	PAOZZ	5310-00-889-2606	96906	MS35425-42	NUT,WING DROP BOLT,3/8-16 IN.....	EA	4
15	6	XBOZZ	2040-00-374-2723	97403	13213E5177	COVER,BOW HATCH HATCH,BOW.....	EA	1
15	7	MOOZZ		97403	13213E5177-4	.GASKET BOW HATCH COVER MANUFACTURE FROM.....	EA	1
15	7A	XDOZZ	9320-00-900-6746	81349	MILR6130TYPE1	.RUBBER 3/16 IN.THK,3/4 IN.WIDE,50 FT LONG.....	RL	1

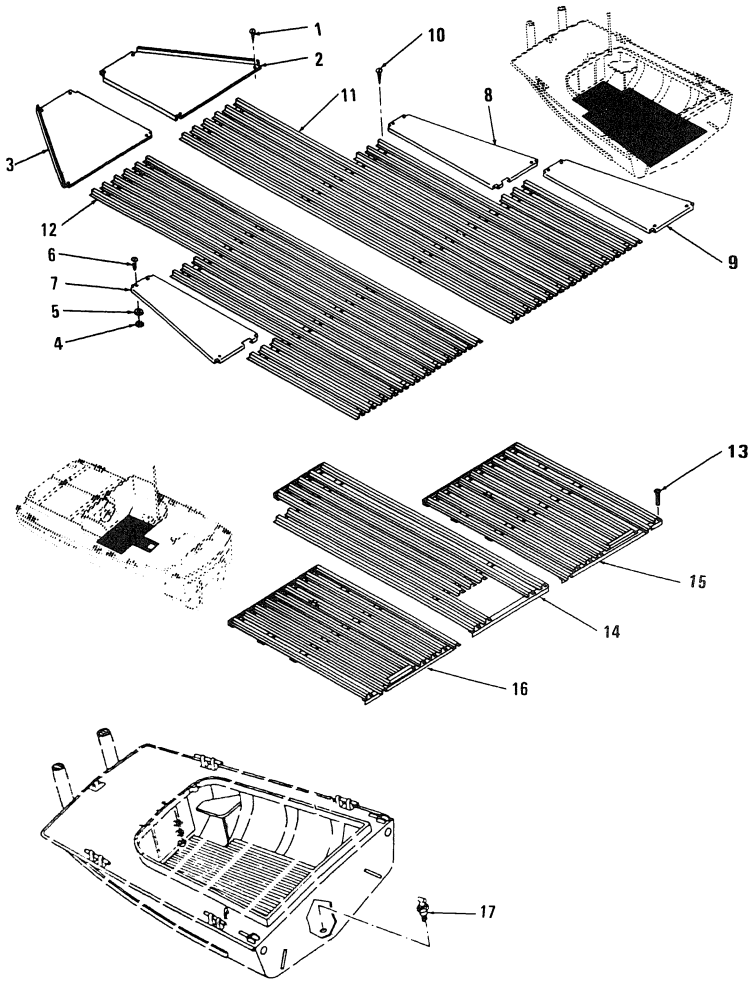

Figure 16. Flooring and Storage Shelves

(1) ILLUSTRATION (a) FIG NO.	(b) ITEM NO.	(2) SMR CODE	(3) NATIONAL STOCK NUMBER	(4) FSCM	(5) PART NUMBER	(6) DESCRIPTION USABLE ON CODE	(7) U/M	(8) QTY INC IN UNIT
16	13	PAOZZ	5305-00-052-6921	96906	MS24629-57	SCREW,MACHINE PAN HEAD GRATING COCKPIT.....	EA	6
16	17	PAOZZ	5340-00-163-4713	97403	13213E5373	PLUG DRAIN,BOW.....	EA	1

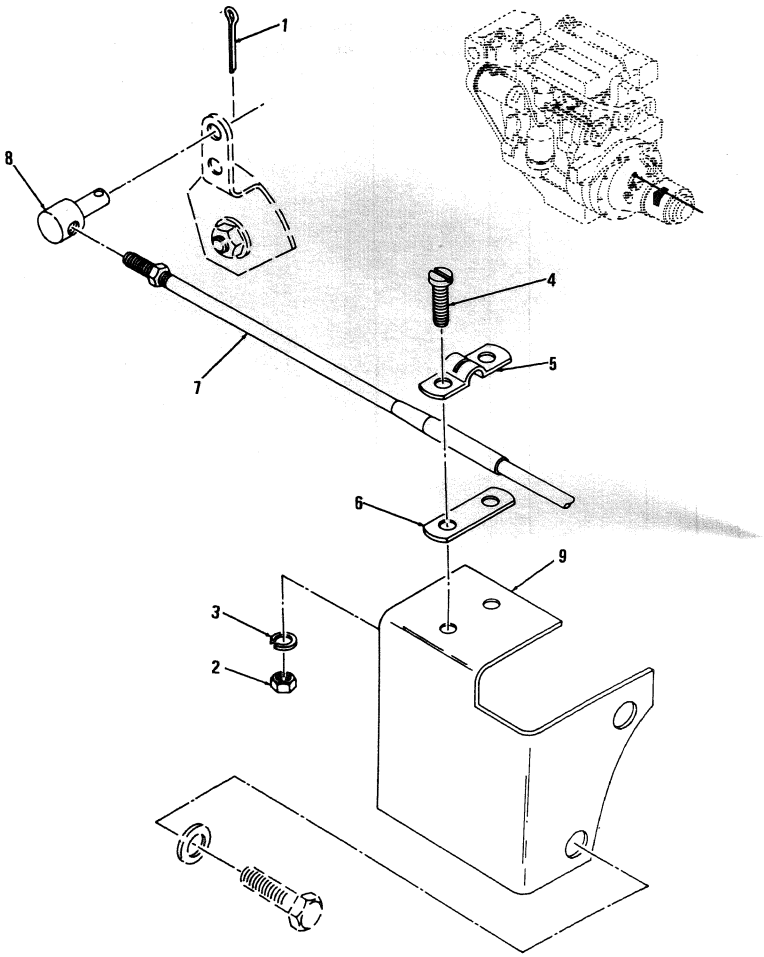

Figure 17. Transmission Cable and Bracket Kit

(1) ILLUSTRATION (a) FIG NO.	(b) ITEM NO.	(2) SMR CODE	(3) NATIONAL STOCK NUMBER	(4) FSCM	(5) PART NUMBER	(6) DESCRIPTION USABLE ON CODE	(7) U/M	(8) QTY INC IN UNIT
						GROUP 04 CONTROLS		
17	1	PAOZZ	5310-00-187-9376	96906	MS24665-315	PIN,COTTER.....CCC	EA	2
17	2	PAOZZ	5310-00-934-9751	96906	MS35650-302	NUT,HEXAGON.....CCC	EA	4
17	3	PAOZZ	5310-00-576-5752	96906	MS35333-39	WASHER,LOCK.....CCC	EA	4
17	4	PAOZZ	5305-00-989-7435	96906	MS35207-264	SCREW,MACHINE.....CCC	EA	4
17	5	XAOZZ		41625	A31509	CLAMP.....CCC	EA	2
17	6	XBOZZ		41625	A31538	SHIM.....CCC	EA	2
17	7	PAOZZ	3040-00-229-2640	97403	13219E1135-3	CABLE,CONTROL THROT 75 IN.LG COMPONENTS SAME AS CABLE,STOCK NO.....CCC	EA	2
17	7	PAOZZ	3040-00-009-3376	97403	13219E1135-4	CONTROL ASSEMBLY,PU 63 IN.LG.....CCC	EA	2
17	8	XBOZZ		41625	A31539	.PIVOT.....CCC	EA	2
17	9	XBOZZ		41625	D33590	.BRACKET.....CCC	EA	2

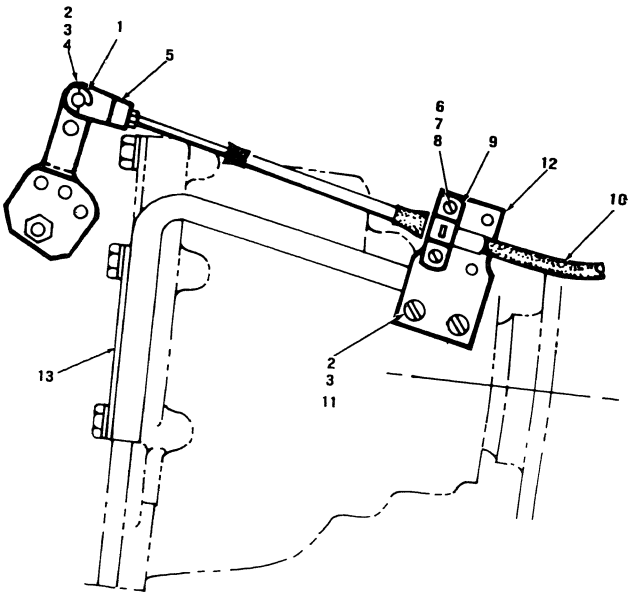

Figure 17A. Transmission Cable and Bracket Kit

(1) ILLUSTRATION (a) FIG NO	(b) ITEM NO	(2) SMR CODE	(3) NATIONAL STOCK NUMBER	(4) FSCM	(5) PART NUMBER	(6) DESCRIPTION USABLE ON CODE	(7) U/M	(8) QTY INC IN UNIT
17A	1	KFOZZ		41625	E-5-16C	E RING 5-16 INCH NOM.....CUA,CUB,CUC	EA	1
17A	2	KFOZZ		41625	A50901-016	NUT,PLAIN,HEXAGON 1-4 INCH-28.....CUA,CUB,CUC	EA	3
17A	3	KFOZZ		41625	A50803-077	WASHER,LOCK 1-4 INCH ID PART OF KIT P/N A301474..CUA,CUB,CUC	EA	3
17A	4	KFOZZ		41625	A300965	PIN PIVOT PART OF KIT PN A301474 PART OF KIT P/N A301474.....	EA	1
17A	5	KFOZZ		41625	A300646	TERMINAL PART OF KIT PN A301474 PART OF KIT P/N A301474..... CUA,CUB,CUC	EA	2
17A	6	KFOZZ		41625	A50112-569	SCREW FILLET HEAD NUMBER 1032X304 INCH PART OF KIT PN A301474.....CUA,CUB,CUC	EA	2
17A	7	KFOZZ		41625	A40803-059	WASHER LOCK NUMBER 10 PART OF KIT P/N A301474....CUA,CUB,CUC	EA	2
17A	8	KFOZZ		41625	A50900-076	NUT,PLAIN,HEXAGON NUMBER 10-32 PART OF KIT P/N A301474..... CUA,CUB,CUC	EA	2
17A	9	KFOZZ		41625	A31509	CLAMP PART OF KIT PN A301474 PART OF KIT P/N A301474..... CUA,CUB,CUC	EA	2
17A	10	PAOZZ	3040-00-229-2640	97403	13219E1135-3	CABLE,CONTROL THROT 75 IN LG.....CUA,CUB,CUC	EA	1
17A	10	PAOZZ	3040-00-009-3376	97403	13219E1135-4	CONTROL ASSEMBLY,PU 63 IN LG.....CUA,CUB,CUC	EA	1
17A	11	KFOZZ		41625	A50146-561	SCREW,MACHINE ROUND HEAD 1-4 INCH-28X 5-8 INCH LONG PART OF KIT PN A301474.....CUA,CUB,CUC	EA	2
17A	12	KFOZZ		41625	A21600	BRACKET CLAMP PART OF KIT P/N A301474.....CUA,CUB,CUC	EA	1
17A	13	KFOZZ		41625	B301477	BRACKET CABLE MOUNT PART OF KIT P/N A301474.....CUA,CUB,CUC	EA	1
17A		PAOZZ	2010-01-105-2060	41625	A301474	KIT,BRACKET TRANSMISSION CABLE.....CUA,CUB,CUC	EA	1
17A	1					E RING	EA	1
17A	2					NUT,PLAIN,HEXAGON	EA	3
17A	3					WASHER,LOCK	EA	3
17A	4					PIN PIVOT	EA	1
17A	5					TERMINAL	EA	2
17A	6					SCREW	EA	2
17A	7					WASHER,LOCK	EA	2
17A	8					NUT,PLAIN,HEXAGON	EA	2
17A	9					CLAMP	EA	2
17A	11					SCREW,MACHINE	EA	2
17A	12					BRACKET CLAMP	EA	1
17A	13					BRACKET CABLE MOUNT	EA	1

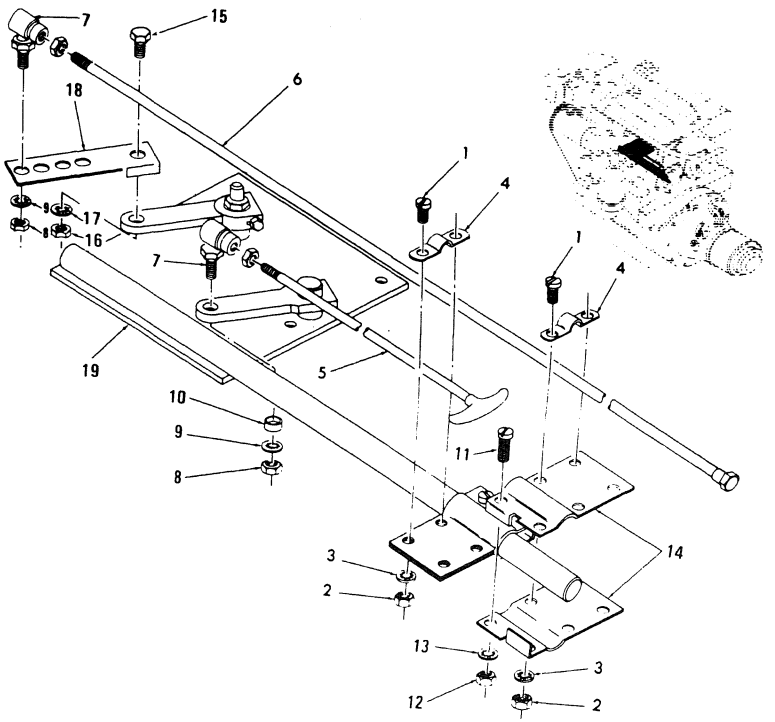

Figure 18. Governor Control Cables and Bracket Kit

(1) ILLUSTRATION (a) FIG NO.	(b) ITEM NO.	(2) SMR CODE	(3) NATIONAL STOCK NUMBER	(4) FSCM	(5) PART NUMBER	(6) DESCRIPTION USABLE ON CODE	(7) U/M	(8) QTY INC IN UNIT
18	1	XBOZZ		96906	MS35191-213	SCREW FILISTER HEAD	EA	8
18	2	PAOZZ	5310-00-934-9765	96906	MS35650-304	NUT,HEXAGON	EA	8
18	3	PAOZZ	5310-00-933-8120	96906	MS35338-138	WASHER,LOCK	EA	8
18	4	PBOZZ	2030-00-933-1630	41625	A31509	CLAMP	EA	4
18	5	XBOZZ	3040-00-233-8913	97403	13219E1136-1	CABLE,CONTROL STOP SHUT-OFF,PORT	EA	1
18		XBOZZ		97403	13219E3482-105	NAMEPLATE,PORT CUA,CUB,CUC	EA	2
18	5	PAOZZ	3040-00-229-2635	97403	13219E1136-2	CABLE,CONTROL STOP SHUT-OFF STBD	EA	1
18	6	PAOZZ	3040-00-233-8912	97403	13219E1135-1	CABLE,CONTROL THROT THROTTLE,PORT	EA	1
18	6	PAOZZ	3040-00-233-8915	97403	13219E1135-2	CABLE,CONTROL THROT THROTTLE,STBD	EA	1
18	7	PAOZZ	3040-00-051-5225	41625	A31126	.BALL JOINT,TERMINAL	EA	4
18	8	PAOZZ	5310-00-400-5503	96906	MS35650-3254	.NUT,HEXAGON 1/4 X 28	EA	4
18	9	PAOZZ	5310-00-933-8121	96906	MS35338-139	.WASHER,LOCK	EA	4
18	10	XBOZZ		41625	A38635	.BUSHING	EA	2
18	11	PAOZZ	5305-00-993-2738	96906	MS35207-280	.SCREW,MACHINE ROUND HEAD	EA	8
18	12	PAOZZ	5310-00-400-5503	96906	MS35650-3254	.NUT,HEXAGON	EA	8
18	13	PAOZZ	5310-00-933-8121	96906	MS35338-139	.WASHER,LOCK	EA	8
18	14	XBOZZ		41625	A21600	.BRACKET CABLE SUPPORT	EA	4
18	15	XDOZZ	5306-00-225-9087	96906	MS90726-32	.BOLT,HEXAGON	EA	2
18	16	PAOZZ	5310-00-252-8748	96906	MS35650-3314	.NUT,HEXAGON	EA	2
18	17	PAOZZ	5310-00-058-3135	96906	MS35336-35	.WASHER,LOCK	EA	2
18	18	XBOZZ		41625	B41331	.LEVER,EXTENSION	EA	2
18	19	XBOZZ		41625	A61313	.ANCHOR,BRACKET	EA	2

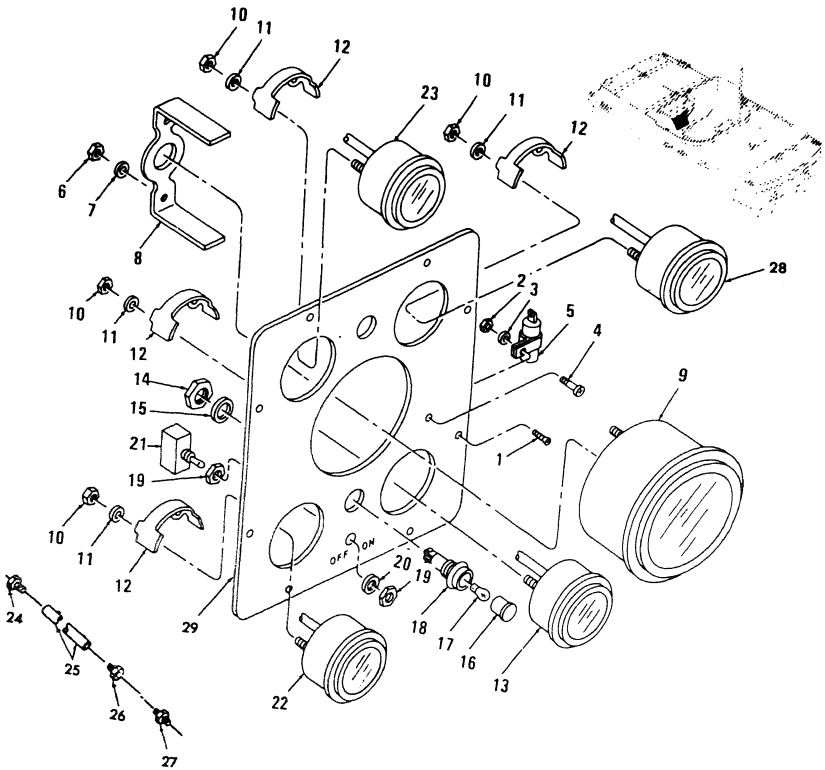

Figure 19. Instrument Panel

(1) ILLUSTRATION (a) FIG NO	(b) ITEM NO	(2) SMR CODE	(3) NATIONAL STOCK NUMBER	(4) FSCM	(5) PART NUMBER	(6) DESCRIPTION USABLE ON CODE	(7) U/M	(8) QTY INC IN UNIT
						GROUP 05 INSTRUMENT PANEL		
19	1	PAOZZ	5305-00-016-6330	96906	MS24526-46	SCREW MACHINE,INSTRUMENT PANEL,10-24 X 3/8 IN.LG.....CCC,CUA	EA	8
19	2	PAOZZ	5310-00-811-3494	96906	MS21044N08	NUT,SELF-LOCKING CAMACITOR,8-32 X 5/8 IN.LG.....CCC,CUA	EA	2
19	3	PAOZZ	5310-00-809-8544	96906	MS27183-7	WASHER,FLAT CAPACITOR,0.187 ID X 0.375 OD X 0.049 IN.THK..... CCC,CUA	EA	2
19	4	PAOZZ	5305-00-958-5477	96906	MS35190-254	SCREW,MACHINE CAPACITOR,8-32 X 5/8 IN.LG.....CCC.CUA	EA	2
19	5	PAOZZ	5910-00-160-4802	81349	CA33KFB504	CAPACITOR INSTRUMENT PANEL.....CCC,CUA	EA	1
19	6	PAOZZ	5310-00-934-9751	96906	MS35650-302	NUT,HEXAGON BRACKET.....	EA	4
19	7	PAOZZ	5310-00-045-3296	24617	453296	WASHER,LOCK BRACKET.....	EA	4
19	8	XAOZZ		24617	1580377	BRACKET..... CCC	EA	2
19	9	PAOZZ	6680-00-825-2076	96906	ms35916-2	TACHOMETER.....	EA	2
19	10	XBOZZ		96906	MS20144N3	NUT,HEXAGON RETAINING CLAMP.....	EA	16
19	11	PAOZZ	5310-00-809-8546	96906	MS27183-8	WASHER,FLAT RETAINING CLAMP.....	EA	16
19	13	PAOZZ	6625-00-025-9053	24617	6473954	AMMETER INSTRUMENT PANEL.....	EA	2
19	14	PAOZZ	5310-00-897-6080	96906	MS35691-27	NUT,HEXAGON LIGHT.....	EA	4
19	15	PAOZZ	5310-00-058-3608	96906	MS35335-64	WASHER,FLAT LIGHT.....	EA	4
19	16	PAOZZ	6210-00-001-1436	72619	22-2900-200	SHIELD,LAMP.....	EA	4
19	17	PAOZZ	6240-00-155-8714	96906	MS25231-313	LAMP,INCANDESCENT.....	EA	4
19	18	PAOZZ	6210-00-842-0168	72619	22-1310-2900-201	LIGHT,PANEL LIGHT.....	EA	4
19	19	PAOZZ	5310-00-811-3494	96906	MS21044N08	NUT,HEXAGON SWITCH.....	EA	2
19	20	PAOZZ	5310-00-809-8544	96906	MS27183-7	WASHER,FLAT SWITCH.....	EA	2
19	21	PAOZZ	5930-00-655-1514	96906	MS35058-22	SWITCH,TOGGLE.....	EA	2
19	22	PAOZZ	6620-00-139-3800	70040	25025308	GAGE OIL PRESSURE ENGINE.....	EA	2
19	23	PAOZZ	6685-00-106-9610	70040	25025312	GAGE,PRESSURE,DIAL OIL PRESSURE TRANSMISSION.....	EA	1
19	24	PAOZZ	4730-00-287-1784	87373	30182-2-4B	.ADAPTER,STRAIGHT TRANS AND ENG OIL PRESSURE GAGE LINE..... CUA,CUB,CUC	EA	4
19	25	PAOZZ	4720-00-847-1710	45681	831-4	.HOSE,NONMETALLIC.....CUA,CUB,CUC	FT	15
19	26	XBOZZ		45681	30882-4-4B	.FITTING,SWIVEL TRANS AND ENG OIL PRESSURE GAGE.....	EA	4
19	27	PAOZZ	4730-00-090-0832	96906	MS39159-3	.ADAPTER,TUBE TRANS OIL PRESS GAGE.....CUA,CUB,CUC	EA	2
19	28	PAOZZ	6685-00-194-1710	24617	6490264	GAGE WATER TEMPERATURE.....	EA	2
19	29	XBOZZ		97403	13213E5467	PANEL,INSTRUMENT.....	EA	2

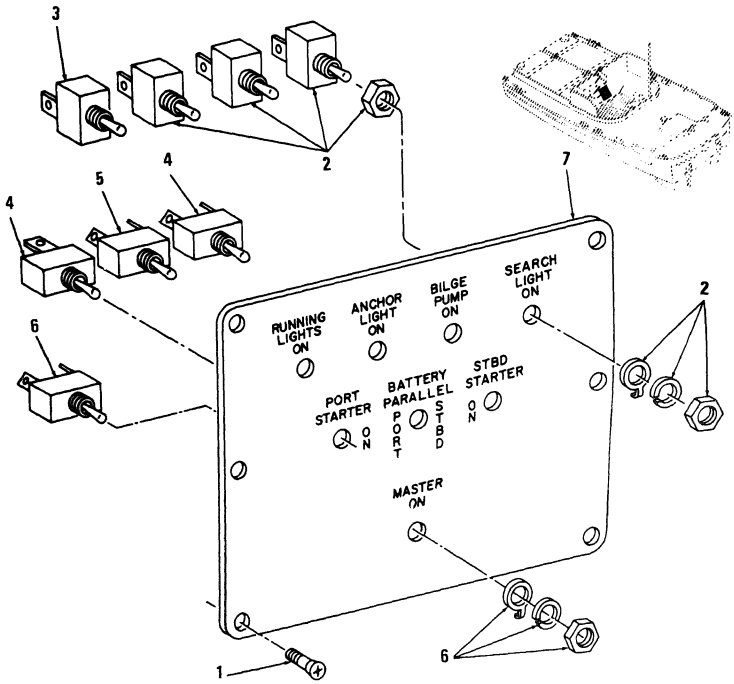

Figure 20. Switch Panel

(1) ILLUSTRATION (a) FIG NO.	(b) ITEM NO.	(2) SMR CODE	(3) NATIONAL STOCK NUMBER	(4) FSCM	(5) PART NUMBER	(6) DESCRIPTION
20	1	PAOZZ	5305-00-957-7282	96906	MS35190-209	SCREW,MACHINE CONTROL PANEL,10-24 X 3/
20	2	PAOZZ	5930-00-655-1516	96906	MS35058-24	SWITCH,TOGGLE SINGLE POLE,RUNNING LIGH
20	3	PAOZZ	5930-00-636-2821	96906	MS35059-24	SWITCH,TOGGLE DOUBLE POLE, RUNNING LIGHT
20	4	PAOZZ	5930-00-655-1520	96906	MS35058-28	SWITCH,TOGGLE SINGLE POLE,STARTER.....
20	5	PAOZZ	5930-00-655-1518	96906	MS35058-27	SWITCH,TOGGLE SINGLE POLE,PARALLEL.....
20	6	PAOZZ	5930-00-577-2523	96906	MS25068-24	SWITCH,MASTER.....
20	7	XBOZZ		97403	13219E1156	PANEL CONTROL,SWITCH.....

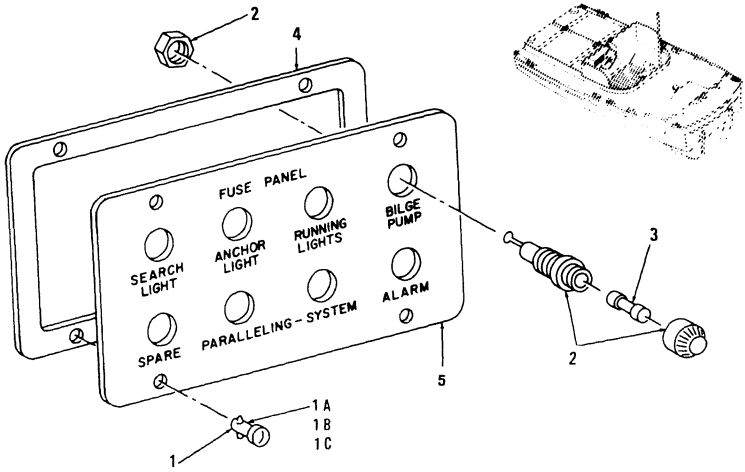

Figure 21. Fuse Panel

SECTION II

(1) ILLUSTRATION (a) FIG NO.	(b) ITEM NO.	(2) SMP CODE	(3) NATIONAL STOCK NUMBER	(4) FSCM	(5) PART NUMBER	
21	1	XBOZZ		81349	MILF5591STYLE2TYPE2SIZE5	STUD ASSY FUSE PANEL.....
21	1A	PAOZZ	5325-00-489-1262	94222	5-0-260	.STUD,FASTENER,SIZE 1-4 TURN; OVAL HEAD....
21	1B	PAOZZ	5365-00-838-0422	94222	85-34-101-17	.RETAINER,FASTENER.....
21	1C	PAOZZ	5325-00-282-7471	94222	5-295	.RECEPTACLE,FASTENER.....
21	2	XBOZZ	5920-00-892-9311	81349	MILF19207TYPEFHN26G	HOLDER,FUSE.....
21	3	PAOZZ	5920-00-284-6707	81349	F02A250V5A	FUSE,PARALLELING.....
21	3	PAOZZ	5920-00-057-2306	81349	F02B32V20A	FUSE BILGE PUMP AND SPARE.....
21	3	PAOZZ	5920-00-581-6126	81349	F02B32V15A	FUSE,SEARCH LIGHT.....
21	3	PAOZZ	5920-00-057-2306	81349	F02B32V20A	FUSE,BILGE PUMP.....
21	3	PAOZZ	5920-00-010-6652	81349	F02A250V3A	FUSE RUNNING LIGHT AND SEARC
21	3	PAOZZ	5920-00-280-8342	81349	F02A250VIA	FUSE ANCHOR AND ALARM.....
21	4	XBOZZ		97403	13219E1158-2	GASKET FUSE PANEL.....
21	5	PAOZZ		97403	13219E1158	PANEL,FUSE.....

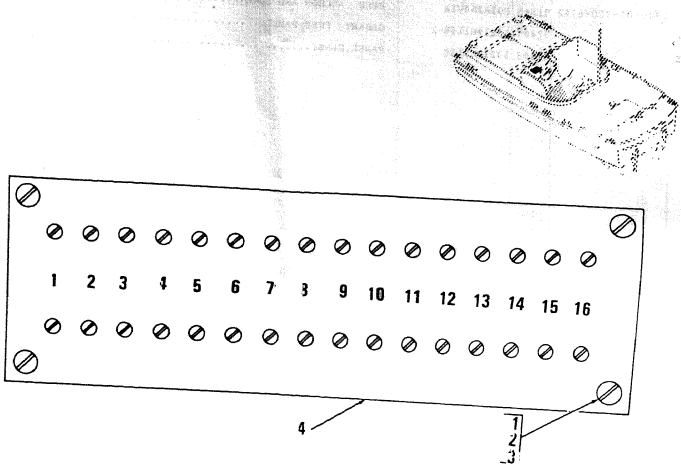

Figure 22. Terminal Board

(1) ILLUSTRATION (a) FIG NO.	(b) ITEM NO.	(2) SMR CODE	(3) NATIONAL STOCK NUMBER	(4) FSCM	(5) PART NUMBER	(6) DESCRIPTION USABLE ON CODE	(7) U/M	(8) QTY INC IN UNIT
22	1	PAOZZ	5310-00-877-5797	96906	MS21044N3	NUT,SELF-LOCKING	EA	4
22	2	PAOZZ	5310-00-809-8546	96906	MS27183-8	WASHER,FLAT	EA	4
22	3	PAOZZ	5305-00-993-1851	96906	MS35207-267	SCREW,MACHINE	EA	4
22	4	XBOZZ		81349	MILT55164-3TYPE	BOARD,TERMINAL	EA	1

FIGURE 23 NOT USED

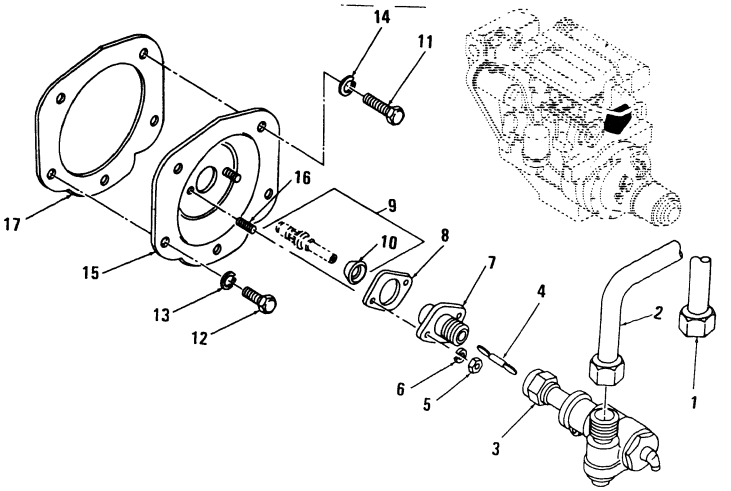

Figure 24. Tachometer Drive

(1) ILLUSTRATION (a) FIG NO	(b) ITEM NO	(2) SMR CODE	(3) NATIONAL STOCK NUMBER	(4) FSCM	(5) PART NUMBER	(6) DESCRIPTION USABLE ON CODE	(7) U/M	(8) QTY INC IN UNIT
24	1	PAOZZ	6680-00-882-0965	96906	MS51071-7	CABLE TACHOMETER,PORT COMPONENT SAME AS CABLE PART NO.MS51071-4	EA	1
24	2	PAOZZ	6680-00-882-0966	96906	MS51071-4	CABLE TACHOMETER,STARBOARD	EA	1
24	3	PBOZZ	3010-00-695-7827	72582	1565192	.ADAPTOR TACHOMETER DRIVE	EA	2
24	4	XBOZZ	5315-00-597-5387	70040	1565109	..KEY,DRIVE TACHOMETER DRIVE	EA	2
24	5	XBOZZ		24617	121917	..NUT,HEXAGON ADAPTOR TO COVER ASSEMBLY,5/16-24 IN	EA	4
24	6	PAOZZ	5310-00-407-9566	96906	MS35338-45	..WASHER,LOCK ADAPTOR TO COVER ASSEMBLY,5/16 IN	EA	4
24	7	XBOZZ	6680-00-364-3506	72582	5155819	..ADAPTOR,TACHOMETER TACHOMETER DRIVE	EA	2
24	8	KBOZZ		72582	5135935	..GASKET,ADAPTOR TACHOMETER DRIVE	EA	2
24	9	XBOZZ	2815-00-072-9388	72582	5124330	..SHAFT ASSEMBLY ASSEMBLY	EA	2
24	10	PBOZZ		72582	5155818	...SLINGER TACHOMETER DRIVE	EA	2
24	11	PAOZZ	5305-00-069-5572	72582	179857	BOLT,MACHINE COVER AND STUD ASSEMBLY	EA	4
24	12	PAOZZ	5305-00-071-1767	96906	MS90725-110	BOLT,MACHINE COVER AND STUD ASSEMBLY	EA	6
24	13	PAOZZ	5310-00-584-5272	96906	MS35338-48	WASHER,LOCK COVER AND STUD ASSEMBLY	EA	6
24	14	PAOZZ	5310-00-595-6852	72582	5150568	WASHER,FLAT COVER AND STUD ASSEMBLY	EA	4
24	15	XBOZZ		24617	5123118	COVER AND STUD ASSEMBLY,TACHOMETER DRIVE	EA	2
24	16	PAOZZ	5307-00-697-1264	72582	5155854	.STUD	EA	4
24	17	PAOZZ	5330-00-620-7359	72582	5117061	GASKET,COVER	EA	2

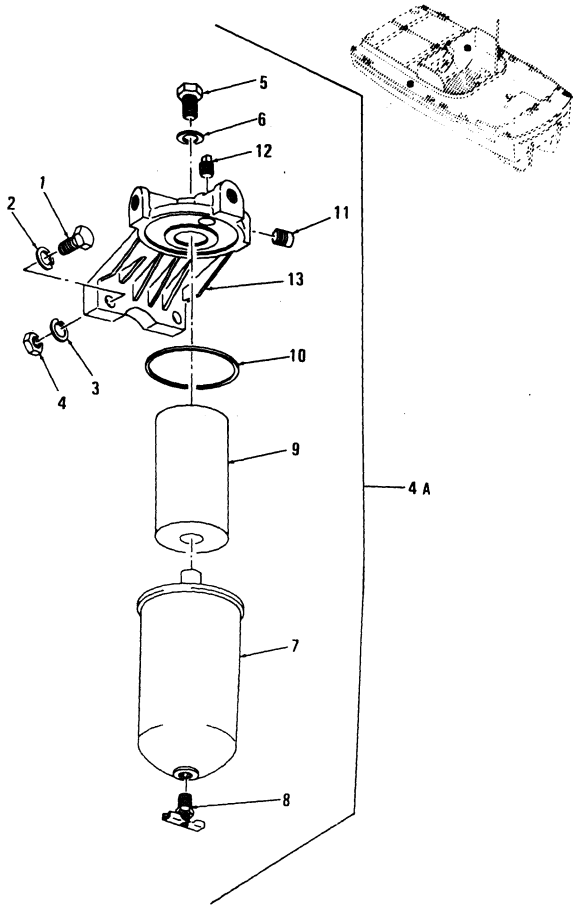

Figure 25. Fuel Strainer

(1) ILLUSTRATION (a) FIG NO	(b) ITEM NO	(2) SMR CODE	(3) NATIONAL STOCK NUMBER	(4) FSCM	(5) PART NUMBER	(6) DESCRIPTION / USABLE ON CODE	(7) U/M	(8) QTY INC IN UNIT
25	1	PAOZZ	5305-00-269-3211	96906	MS90725-60	.BOLT,MACHINE	EA	4
25	2	PAOZZ	5310-00-637-9541	96906	MS35338-46	.WASHER,LOCK	EA	4
25	3	PAOZZ	5310-00-080-6004	96906	MS27183-14	.WASHER,FLAT	EA	4
25	4	PAOZZ	5310-00-880-7744	96906	MS51967-5	.NUT,HEXAGON	EA	4
25	4A	PAOZZ	2910-00-287-5474	72582	5575568	.STRAINER FUEL OIL	EA	2
25	5	PAOZZ	2910-00-080-7294	72582	6435793	..BOLT,MACHINE	EA	2
25	6	XAOZZ		72582	6435794	..GASKET	EA	2
25	7	XAOZZ		72582	5577586	..SHELL FUEL OIL	EA	2
25	8	PAOZZ	4820-00-477-9779	72582	103647	..COCK,DRAIN	EA	2
25	9	PAOZZ	2910-00-792-8985	72582	5574961	..ELEMENT FUEL OIL STRAINER	EA	2
25	10	XAOZZ		72582	5574161	.. GASKET (FURNISHED W/ELEMENT)	EA	2
25	11	PAOZZ	5365-00-708-7865	72582	5145011	..PIPE,PLUG	EA	2
25	12	PAOZZ	4730-00-187-4207	72582	5145010	..PLUG,PIPE	EA	4
25	13	XDOZZ		72582	6436253	..COVER	EA	2

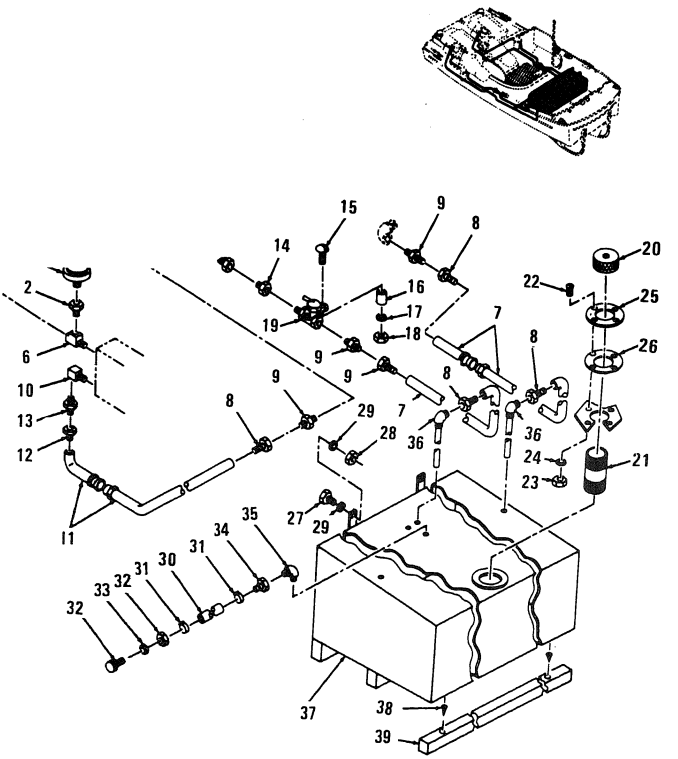

Figure 26. Fuel Tank, Lines, Fittings, Alarm Bell, and Fuel Pressure and Sensor

(1) ILLUSTRATION (a) FIG NO	(b) ITEM NO	(2) SMR CODE	(3) NATIONAL STOCK NUMBER	(4) FSCM	(5) PART NUMBER	(6) DESCRIPTION USABLE ON CODE	(7) U/M	(8) QTY INC IN UNIT
26	1	PAOZZ	5930-00-855-3938	74400	M4012	SWITCH,FUEL PRESSURE	EA	2
26	2	PAOZZ	4730-00-011-9922	88044	AN912-1	REDUCER,BRASS 1-4X1-8IN PIPE	EA	2
26	3	PAOZZ	2815-00-922-2009	72582	5137492	HOSE ASSY FILTER TO CYLINDER HEAD	EA	2
26	4	PAOZZ	4720-00-432-1267	72582	5131829	HOSE ASSEMBLY,NONME	EA	2
26	5	PAOZZ	4730-00-277-8274	72582	137423	ELBOW 90 DEGREE	EA	4
26	6	PAOZZ	4730-00-277-9615	24617	444552	TEE,PIPE	EA	2
26	7	XBOZZ		87373	831-6	HOSE STRAINER TO VALVE	FT	V
26	8	PAOZZ		45681	30882-6-6B	FITTING,SWIVEL PUSH-LOK	EA	16
26	9	XBOZZ		81343	SAEJ513BFIG251-4 X5-8	ADAPTER,FUEL CCC	EA	6
26	10	PAOZZ	4730-00-934-8026	45681	30182-6-6B	.FITTING,BRASS 3-8IN HOSE TO 3-8IN PIPE CUA,CUB,CUC	EA	4
26	11	XBOZZ		87373	831-6	HOSE STRAINER TO VALVE	FT	V
26	12	PAOZZ		45681	30882-6-6B	FITTING,SWIVEL	EA	16
26	13	XBOZZ		81343	SAEJ513BFIG251-4 X5-8	ADAPTER,FUEL CCC	EA	6
26	14	XBOZZ		81343	SAEJ513BFIG273-8 X5-8	ADAPTER,VALVE CCC	EA	4
26	15	PAOZZ	5305-00-988-1728	96906	MS35206-287	SCREW,MACHINE	EA	4
26	16	XBOZZ		97403	13219E1111-204	SPACER	EA	4
26	17	PAOZZ	5310-00-582-5965	96906	MS35338-44	WASHER,LOCK	EA	4
26	18	PAOZZ	5310-00-997-1888	96906	MS35649-2252	NUT,HEXAGON	EA	4
26	19	PAOZZ	4820-00-741-0385	30327	103HD3-8	VALVE,SHUT-OFF	EA	2
26	20	PAOZZ	2910-00-410-7514	97403	13216E6797	CAP,FUEL TANK CCC	EA	2
26	20	PAOZZ	2910-01-139-1115	97403	13226E1361	CAP FUEL TANK CUA	EA	1
26	20	PAOZZ	2910-00-214-2279	81336	8630-24-3-9	CAP FUEL TANK CUB,CUC	EA	1
26	21	PAOZZ	4730-00-001-6174	97403	13216E6800	NIPPLE,PIPE CCC	EA	2
26	22	PAOZZ	5305-00-984-7341	96906	MS35191-273	SCREW,MACHINE CCC	EA	8
26	23	XDOZZ	5310-00-934-9765	96906	MS35650-304	NUT,PLAIN,HEXAGON	EA	4
26	24	PAOZZ	5310-00-809-8546	96906	MS27183-8	WASHER,FLAT CCC	EA	8
26	25	XBOZZ		97403	13216E6798	SHIELD FUEL TANK CCC	EA	2
26	26	XBOZZ		97403	13216E6799	GASKET,SHIELD CCC	EA	2
26	27	XBOZZ	5305-00-782-9495	96906	MS90725-111	SCREW TANK MOUNTING	EA	4
26	28	XBOZZ		96906	MS24129-2-8C	NUT SELF-LOCKING,HEXAGON	EA	4
26	29	XBOZZ	5310-00-167-0823	88044	AN960-816	WASHER,FLAT	EA	8
26	30	XBOZZ		81348	SAE30R1 1-21N ID	HOSE FUEL AND OIL CCC,CUA	EA	2
26	31	PAOZZ	4730-00-908-3195	96906	MS35842-10	CLAMP HOSE CCC,CUA	EA	2
26	32	XBOZZ		79577	8705	VENT,FUEL TANK CCC,CUA	EA	2
26	33	XDOZZ		97403	13213E5389-1	GASKET,VENT TANK CCC,CUA	EA	4
26	34	XBOZZ		97403	13213E5469-2	ADAPTER,PIPE VENT TANK CCC,CUA	EA	2
26	35	XBOZZ		96906	MS51952-3	ELBOW,PIPE STREET 90 DEGREE CCC,CUA	EA	4

(1) ILLUSTRATION (a) FIG NO	(b) ITEM NO	(2) SMR CODE	(3) NATIONAL STOCK NUMBER	(4) FSCM	(5) PART NUMBER	(6) DESCRIPTION USABLE ON CODE	(7) U/M	(8) QTY INC IN UNIT
				97403	13219E1142	TUBE,SUCTION.....CCC	EA	2
				97403	13219E1160	TANK,FUEL.....	EA	2
				96906	MS35494-615	SCREW WOOD,FLAT HEAD.....	EA	12
				81348	MML751GRN01	LUMBER,SOFTWOOD.....	EA	2
			50-00-141-4847	19557	435-4G1	BELL,ELECTRICAL ALARM SYSTEM (24V).....	EA	1

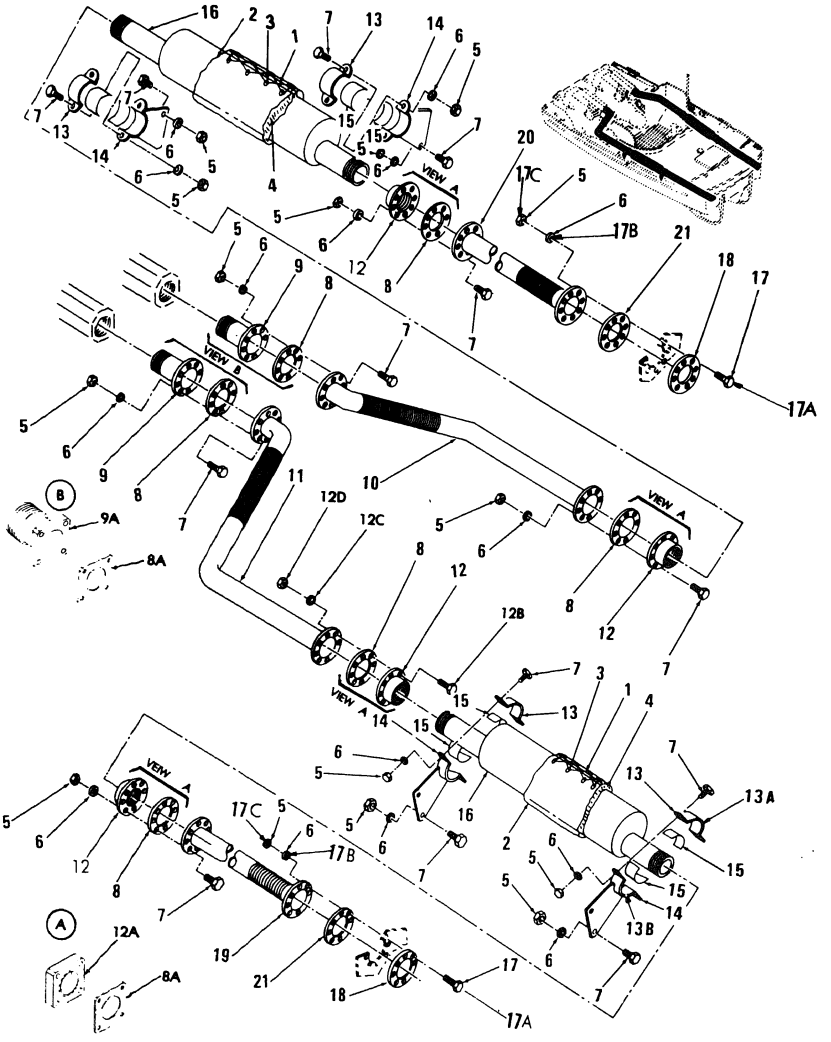

Figure 27. Exhaust Pipes, Mufflers and Fittings

(1) ILLUSTRATION (a) FIG NO.	(b) ITEM NO.	(2) SMR CODE	(3) NATIONAL STOCK NUMBER	(4) FSCM	(5) PART NUMBER	(6) DESCRIPTION USABLE ON CODE	(7) U/M	(8) QTY INC IN UNIT
						GROUP 07 ENGINE EXHAUST SYSTEM		
27	1	PAOZZ	4010-01-039-3856	39428	3458T14	WIRE,STRAND,CRES 50 FT REQUIRED	FT	50
27	2	PAOZZ	5640-01-030-1631	90896	41M10AAA	CLOTH,ASBESTOS 96 SQ FT REQUIRED....CUA,CUB,CUC	FT	96
27	3	PAOZZ	5325-00-212-7857	97403	13219E1175	FASTENER,INSULATION EXH COVERS	SE	100
27	4	PAOZZ	5640-0 -786-2229	81349	MIL116411	INSULATION EXH COVERS....CCC	SH	10
27	5	PAOZZ	5310-00-767-0445	96906	MS51971-2	NUT,HEXAGON....CCC	EA	80
27	6	PAOZZ	5310-00-974-6623	96906	MS35338-140	WASHER,LOCK....CCC	EA	80
27	7	PAOZZ	5306-00-543-4405	96906	MS35307-334	BOLT,MACHINE....CCC	EA	64
27	8	PAOZZ	5330-00-001-4982	97403	13219E1124-1	GASKET,EXHAUST....CCC	EA	6
27	8A	PAOZZ	5330-01-027-8986	97403	13219E3470	GASKET EXHAUST....CUA,CUB,CUC	EA	6
27	9	XBOZZ	4730-01-097-4906	97403	13219E1182	FLANGE,MANIFOLD	EA	2
27	9A	XBOZZ		97403	13219E3473	ADAPTER,OUTLET....CUA,CUB,CUC	EA	1
27	10	PAOZZ	2990-00-234-0460	97403	13219E1185	HEADER EXHAUST PORT....CCC	EA	1
27	10	PAOZZ	2990-01-030-8827	97403	13219E3463-1	EXHAUST HEADER,PORT....CUA,CUB,CUC	EA	1
27	11	PAOZZ	2990-01-030-9239	97403	13219E3463-2	EXHAUST HEADER,STBD....CUA,CUB,CUC	EA	1
27	11	XBOZZ		94703	13219E1184	HEADER EXHAUST STBD....CCC	EA	1
27	12	PAOZZ	2990-00-2.. 0470	97403	13219E1183	FLANGE....CCC	EA	4
27	12A	XBOZZ		97403	13219E3471	FLANGE,EXHAUST....CUA,CUB,CUC	EA	8
27	12B	PAOZZ	5305-00-964-0635	96906	MS35307-369	SCREW,CAP....CUA,CUB,CUC	EA	8
27	12C	PAOZZ	5310-00-984-7042	96906	MS35338-141	WASHER,LOCK....CUA,CUB,CUC	EA	24
27	12D	PAOZZ	5310-00-913-8881	96906	MS51971-3	NUT,HEX....CUA,CUB,CUC	EA	24
27	13	XBOZZ		97403	13219E1127	CLAMP,EXHAUST....CCC	EA	4
27	13A	XBOZZ		97403	13219E3465	CLAMP,EXHAUST....CUA,CUB,CUC	EA	6
27	13B	XBOZZ		97403	13219E3466	CLAMP,EXHAUST....CUA,CUB,CUC	EA	6
27	14	XBOZZ		97403	13219E3464	SUPPORT,EXHAUST....CUA,CUB,CUC	EA	4
27		PAOZZ	5310-00-984-3806	96906	MS51922-9	NUT,SELF-LOCKING,HE....CUA,CUB,CUC	EA	24
27	15	XBOZZ		81346	ASTMD315AAA GRADE 1-8X1 IN	TAPE, ASBESTOS CLAMP....CCC	EA	4
27	16	XDOZZ	2990-00-432-1326	91435	7530GS3	MUFFLER,EXHAUST....CCC	EA	2
27	16	PAOZZ	2990-00-905-8122	18265	MFM06-0005	MUFFLER,EXHAUST....CUA,CUB,CUC	EA	2
27	17	PAOZZ	5306-00-037-9674	96906	MS35307-336	BOLT,MACHINE....CCC	EA	16
27	17A	PAOZZ	5305-00-051-0839	96906	MS51957-98	SCREW,MACH....CUA,CUB,CUC	EA	16
27	17B	PAOZZ	5310-00-625-5756	96906	MS15795-812	WASHER,FLAT....CUA,CUB,CUC	EA	16
27	17C	PAOZZ	5310-00-241-6606	96906	MS17830-5C	NUT,SELF LKG....CUA,CUB,CUC	EA	16
27	18	XBOZZ		97403	13219E1168-2	RING,EXHAUST....CCC	EA	2
27	19	PAOZZ	2990-00-234-0461	97403	13219E1167-2	TAILPIPE ASSY STBD....CCC	EA	1
27	20	PAOZZ	2990-00-221-5857	97403	13219E1167-1	TAILPIPE ASSY PORT....CCC	EA	1
27	20	PAOZZ	2990-01-031-1903	97403	13219E3462	TAILPIPE,EXHAUST....CUA,CUB,CUC	EA	2
27	21	PAOZZ	5330-00-222-0569	97403	13219E1124-2	GASKET,EXHAUST....CCC	EA	2

(1) ILLUSTRATION (a) FIG NO	(b) ITEM NO	(2) SMR CODE	(3) NATIONAL STOCK NUMBER	(4) FSCM	(5) PART NUMBER	(6) DESCRIPTION USABLE ON CODE	(7) U/M	(8) QTY INC IN UNIT
27	21	PAO22	5330-01-026-6331	97403	13219E3468-64	GASKET EXHAUST.....CUA,CUB,CUC	EA	2

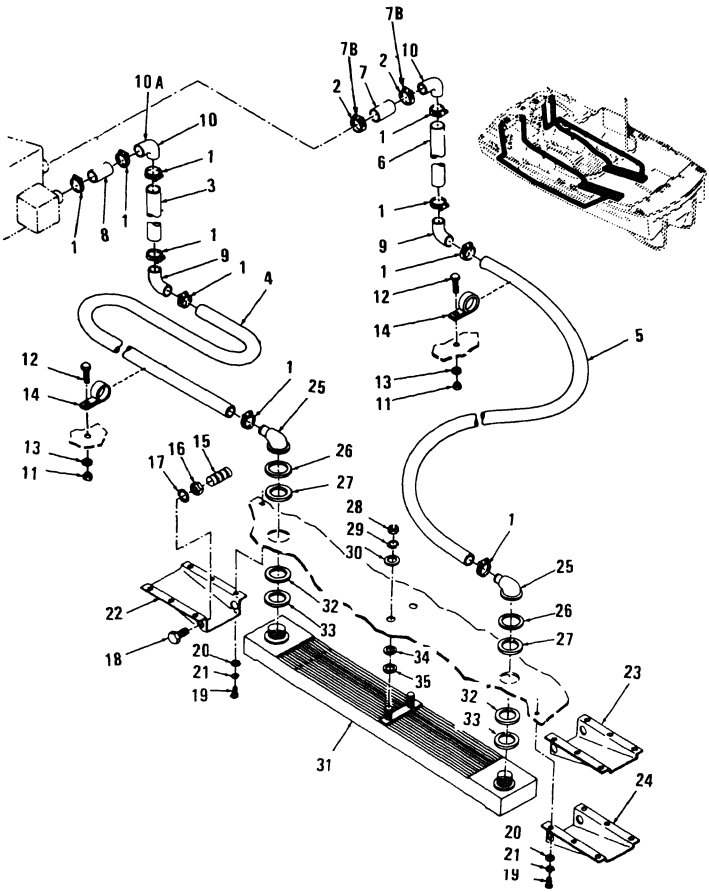

Figure 28. Heat Exchanger, Cooling Lines and Fittings

(1) ILLUSTRATION (a) FIG NO	(b) ITEM NO	(2) SMR CODE	(3) NATIONAL STOCK NUMBER	(4) FSCM	(5) PART NUMBER	(6) DESCRIPTION USABLE ON CODE	(7) U/M	(8) QTY INC IN UNIT
						GROUP 08 ENGINE COOLING SYSTEM		
28	1	XBOZZ	4730-00-585-8394	81343	SAEJ536ATYPEFSIZ E28	CLAMP HOSE COOLING SYSTEM.....CCC	EA	10
28	1	PAOZZ	4730-00-908-3193	96906	MS35842-12	CLAMP,HOSE.....CUA,CUB,CUC	EA	2
28	2	XBOZZ	4730-00-204-3491	81343	SAEJ536ATYPEFSIZ E32	CLAMP,HOSE,COUPLING.....CCC	EA	2
28	3	MOOZZ		81343	SAEJ20R1	HOSE COOLING SYSTEM MANUFACTURE FROM.....	EA	1
28	3A	PAOZZ	4720-00-278-4917	73842	1-1/2 REDWING MULT-PURP	.HOSE,HVY DTY 1-1/2 ID,24 IN.LENGTH.....	FT	V
28	4	MOOZZ		81343	SAEJ20R1	HOSE COOLING SYSTEM MANUFACTURE FROM.....	EA	1
28	4A	PAOZZ	4720-00-278-4917	73842	1-1/2 REDWING MULT-PURP	.HOSE,HVY DTY 1-1/2 ID,80 IN.LENGTH.....CCC	FT	V
28	4A	PAOZZ	4720-00-278-4917	73842	1-1/2 REDWING MULT-PURP	.HOSE,HVY DTY 50FT REQUIRED.....CUA,CUB,CUC	FT	50
28	5	MOOZZ		81343	SAEJ20R1	HOSE COOLING SYSTEM MANUFACTURE FROM.....	EA	1
28	5A	PAOZZ	4720-00-278-4917	73842	1-1/2 REDWING MULT-PURP	.HOSE,HVY DTY 1-1/2 ID,120 IN.LENGTH.....	FT	V
28	6	MOOZZ		81343	SAEJ20R1	HOSE COOLING SYSTEM MANUFACTURE FROM.....	EA	1
28	6A	PAOZZ	4720-00-278-4917	73842	1-1/2 REDWING MULT-PURP	.HOSE,HVY DTY 1-1/2,ID 30 IN.LENGTH.....	FT	V
28	7	MOOZZ		81343	SAEJ20R1	HOSE COOLING SYSTEM MANUFACTURE FROM.....	EA	1
28	7A	PAOZZ	4720-00-517-7917	16662	0071-M-14360	.HOSE,HVY DTY 1-3/4 ID,4 IN.LENGTH.....CCC	FT	2
28	7A	PAOZZ	4720-00-018-2162	81348	ZZ-H-428	..HOSE,NONMETALLIC 12 IN REQUIRED.....CUA,CUB,CUC	FT	1
28	7B	PAOZZ	4730-00-909-8627	96906	MS35842-13	..CLAMP,HOSE.....CUA,CUB,CUC	EA	8
28	8	MOOZZ		81343	SAEJ20R1	HOSE COOLING SYSTEM MANUFACTURE FROM.....	EA	1
28	8A	PAOZZ	4720-00-517-7917	16662	0071-M-14360	.HOSE,HVY DTY 1 3/4 ID,4 IN.LENGTH.....	FT	V
28	9	PAOZZ	4730-00-818-5194	41947	W2055	ELBOW 1 1/4 X 1 1/4.....	EA	2
28	10	PAOZZ	4730-00-818-3866	41947	W2064	ELBOW 1 1/2 X 1 1/4.....CCC	EA	2
28	10A	XBOZZ	4730-00-818-3866	12168	607LT1 1-2X1 1-4	ELBOW NINETY DEGREE COPPER.....CUA,CUB,CUC	EA	1
28	11	PAOZZ	5310-00-031-0920	96906	MS17828-4C	NUT,SELF LOCK HOSE CLAMP.....CCC	EA	6
28	12	PAOZZ	5305-00-225-3839	96906	MS90725-8	SCREW,CAP,HEXAGON H HOSE CLAMP.....CCC	EA	6
28	13	PAOZZ	5310-00-809-4058	96906	MS27183-10	WASHER,FLAT HOSE CLAMP.....CCC	EA	6
28	14	XBOZZ		97403	132135357	CLAMP,HOSE.....CCC	EA	6
28	15	PAOZZ	5340-00-682-2174	81349	MILA18001	ANODE,CORROSION PRE.....	EA	16
28	16	PAOZZ	5310-00-016-7361	96906	MS21083N18	NUT,SELF LOCKING ANODE MOUNTING.....	EA	4
28	17	PAOZZ	5310-00-209-0698	96906	MS27183-29	WASHER,FLAT ANODE MOUNTING.....	EA	4

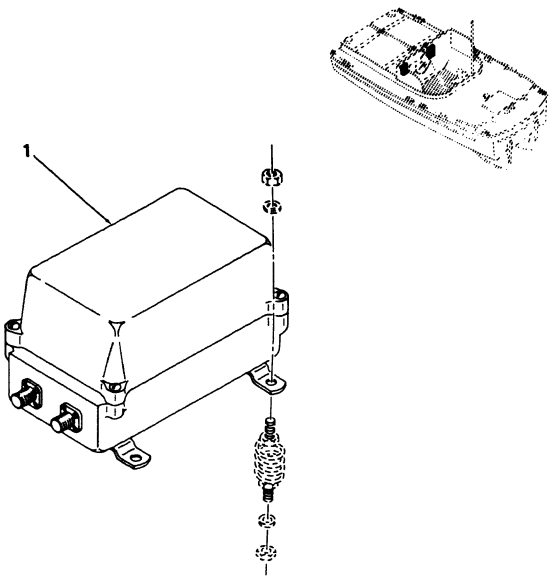

Figure 29. Generator Regulator

(1) ILLUSTRATION (a) FIG NO	(b) ITEM NO	(2) SMR CODE	(3) NATIONAL STOCK NUMBER	(4) FSCM	(5) PART NUMBER	(6) DESCRIPTION USABLE ON CODE	(7) U/M	(8) QTY INC IN UNIT
						GROUP 09 ENGINE STARTING SYSTEM		
29	1	PAOZZ	2920-00-640-7518	16764	1118644	REGULATOR ASSY GENERATOR.....CCC	EA	2
29	1	PAOZZ		72582	5102888	REGULATOR,ENG GEN VOLTAGE 24V 18AMP NEG GRD.....CUA,CUB,CUC	EA	2

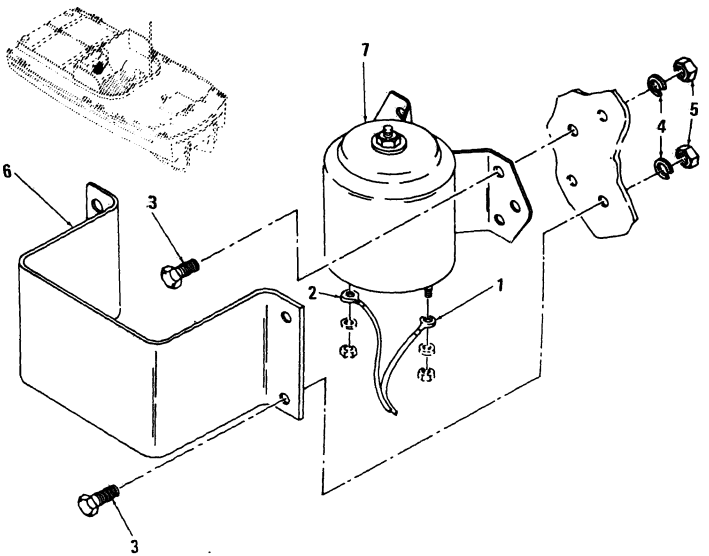

Figure 30. Magnetic Cranking Switch

(1) ILLUSTRATION (a) FIG NO	(b) ITEM NO	(2) SMR CODE	(3) NATIONAL STOCK NUMBER	(4) FSCM	(5) PART NUMBER	(6) DESCRIPTION USABLE ON CODE	(7) U/M	(8) QTY INC IN UNIT
30	1	PAOZZ	2920-00-241-7625	97403	13219E1144-1	CABLE MAGNETIC SWITCH TO STARBOARD STARTER.....	EA	1
30	2	PAOZZ	2920-00-241-7631	97403	13219E1144-2	CABLE MAGNETIC SWITCH TO PORT STARTER.....	EA	1
30	3	PAOZZ	5305-00-068-0502	96906	MS90725-6	.BOLT.....	EA	8
30	4	PAOZZ	5310-00-809-4058	96906	MS27183-10	.WASHER,FLAT.....	EA	8
30	5	PAOZZ	5310-00-031-0920	96906	MS17828-4C	.NUT,SLEF-LOCKING.....	EA	8
30	6	XBOZZ		97403	1321E5297	.GUARD,COVER.....	EA	1
30	7	PAOZZ	5945-00-863-3418	35510	4924SC	.RELAY,ELECTROMAGNET MAGNETIC.....	EA	1

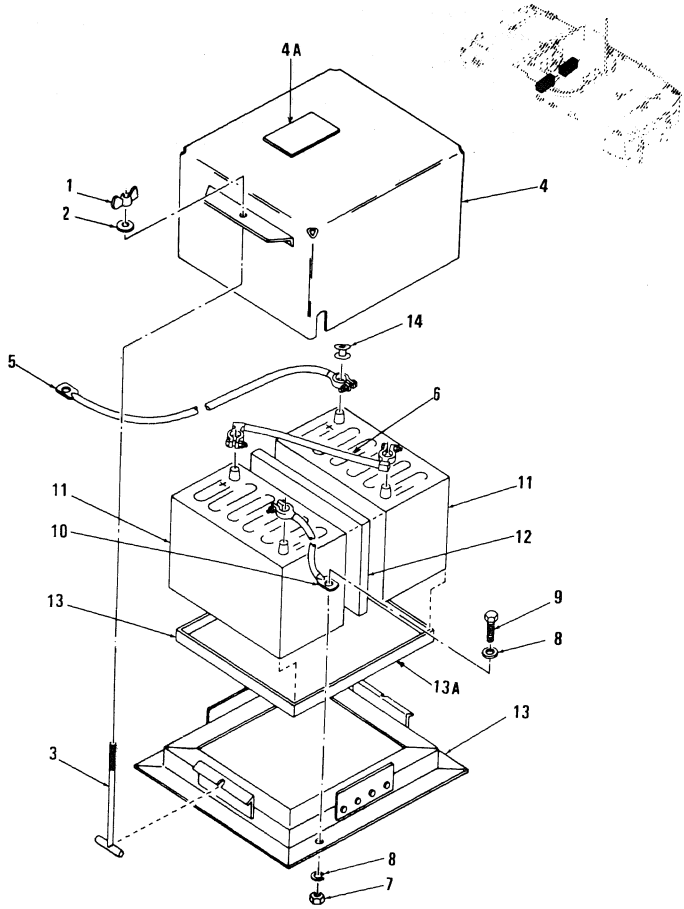

Figure 31. Batteries, Cover and Cables

(1) ILLUSTRATION (a) FIG NO	(b) ITEM NO	(2) SMR CODE	(3) NATIONAL STOCK NUMBER	(4) FSCM	(5) PART NUMBER	(6) DESCRIPTION USABLE ON CODE	(7) U/M	(8) QTY INC IN UNIT
31	1	PAOZZ	5310-00-889-2606	96906	MS35425-42	NUT,PLAIN WING,BATTERY COVER,3/8-16 IN.THD SIZE.....	EA	4
31	2	PAOZZ	5310-00-225-5328	96906	MS15795-841	WASHER,FLAT.....	EA	4
31	3	PAOZZ	5306-00-406-1254	97403	13213E5399	BOLT (T),BATTERY COVER.....	EA	4
31	4	XDOZZ	6135-01-081-9725	97403	13219E1147	COVER,BATTERY.....	EA	1
31	4A	XBOZZ		97403	13219E1148	PLATE,BATTERY.....CUA,CUB,CUC	EA	2
31	5	PAOZZ	6140-00-008-9794	97403	13219E1146-1	LEAD,STORAGE BATTER BATTERY TO MAGNETIC SWITCH,PORT.....	EA	1
31	5	PAOZZ	6140-00-008-9795	97403	13219E1146-2	CABLE BATTERY MAGNE BATTERY TO MAGNETIC SWITCH,STBD.....CCC	EA	1
31	5	PAOZZ	6140-01-027-9035	97403	13219E3497-2	LEAD,STORAGE BATTER.....CUA,CUB,CUC	EA	1
31	6	PAOZZ	6140-00-008-9793	97403	13219E1139	CABLE BATTERY JUMPE BATTERY JUMPER.....	EA	2
31	7	XBOZZ	5310-00-701-5786	97403	MS17828-6C	NUT,HEXAGON TRAY TO FRAME,3/8-16 IN.THD SIZE.....	EA	8
31	8	PAOZZ	5310-00-080-6004	96906	MS27183-14	WASHER FLAT,TRAY TO FRAME,0.406 ID X 0.812 ODX 0.065 IN.THK...	EA	8
31	9	PAOZZ	5305-00-269-3211	96906	MS90725-60	SCREW CAP,HEXAGON,TRAY TO FRAME,3/8-16 X 1 IN.LG.....	EA	8
31	10	PAOZZ	6140-00-008-9792	97403	13219E1138	LEAD,STORAGE BATTER BATTERY TO GROUND.....	EA	2
31	11	PAOZA	6140-00-057-2554	96906	MS35000-3	BATTERY,12 VOLT,100.....	EA	4
31	12	XBOZZ		97403	13219E1140	LINER BATTERY TRAY.....	EA	2
31	13	XBOZZ		97403	13219E1141	TRAY,BATTERY.....CCC	EA	2
31	13A	XOBZZ		97403	13219E3487	TRAY,BATTERY.....CUA,CUB,CUC	EA	2
31	14	PAOZZ	5325-00-290-1960	96906	MS35489-27	GROMMET,NONMETALLIC.....CCC	EA	2

FIGURE 32 NOT APPLICABLE

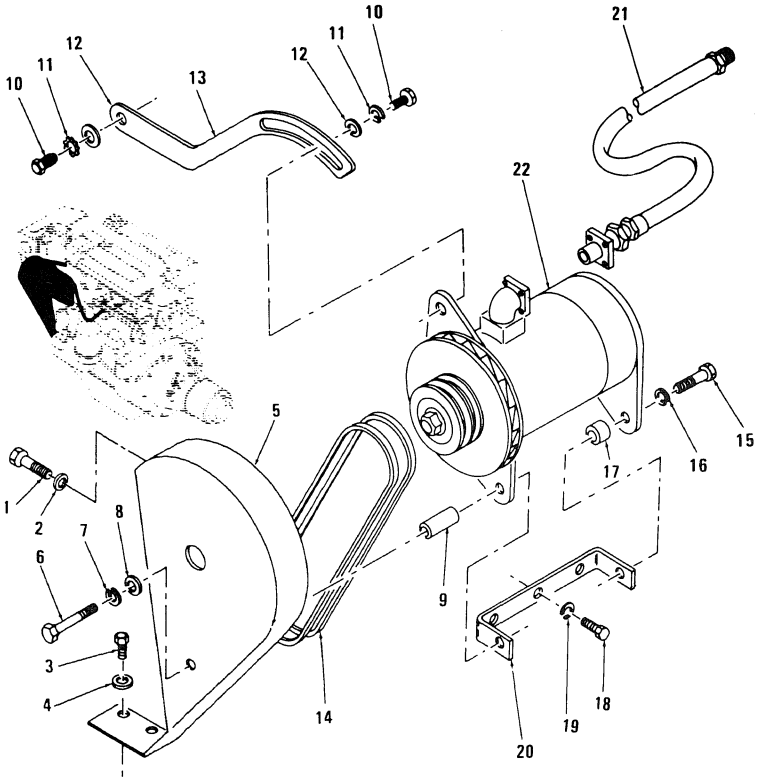

Figure 33. V-Belt Shield, V-Belt and Generator Mounting Parts.

(1) ILLUSTRATION (a) FIG NO	(b) ITEM NO	(2) SMR CODE	(3) NATIONAL STOCK NUMBER	(4) FSCM	(5) PART NUMBER	(6) DESCRIPTION USABLE ON CODE	(7) U/M	(8) QTY INC IN UNIT
						GROUP 10 ENGINE		
33	1	PAOZZ	5305-00-069-5570	96906	MS90725-82	.BOLT,MACHINE	EA	2
33	2	PAOZZ	5310-00-809-5997	96906	MS27183-17	.WASHER,FLAT	EA	2
33	3	PAOZZ	5306-00-225-8498	96906	MS90725-33	.BOI ,MACHINE	EA	4
33	4	PAOZZ	5310-00-407-9566	96906	MS35338-45	.WASHER,LOCK	EA	4
33	5	XBOZZ		72582	5108991	.GUARD,GENERATOR	EA	2
33	6	PAOZZ	5305-00-269-3209	96906	MS90725-58	.BOLT,MACHINE.....CCC	EA	2
33	6	PAOZZ	5305-00-244-3878	72582	454949	.SCREW,CAP,HEXAGON H 7/16-14X4.....CUA,CUB,CUC	EA	1
33	7	PAOZZ	5310-00-061-1258	24617	178551	.WASHER,LOCK.....CCC	EA	2
33	7	PAOZZ	5310-00-080-9785	96906	MS45904-80	.WASHER,LOCK 7/16 INT EXT TOOTH CAD.....CUA,CUB,CUC	EA	2
33	8	PAOZZ	5310-00-080-6004	96906	MS27183-14	.WASHER,FLAT.....CCC	EA	2
33	8	PAOZZ	5310-00-809-3079	96906	MS27183-19	.WASHER,FLAT PLAIN 9/16X13/8.....CUA,CUB,CUC	EA	2
33	9	PAOZZ	5365-00-461-4813	72582	5182628	.SPACER,SPECIAL.....CCC	EA	2
33	9	PAOZZ		72582	5147868	.SPACER,SLEEVE 7/8X15/16X 1 21/32 INCH.....CUA,CUB,CUC	EA	1
33	10	PAOZZ	5305-00-269-3211	96906	MS90725-60	.BOLT,MACHINE	EA	2
33	11	PAOZZ	5310-00-061-1258	24617	178551	.WASHER,LOCK	EA	2
33	12	XBOZZ		24617	MS15795-14	.WASHER,FLAT	EA	2
33	13	PAOZZ	2920-00-883-1223	72582	5134333	.STRAP GENERATOR ADJ.....CCC	EA	2
33	13	PAOZZ		72582	5147039	.STRAP,GENERATOR ADJ GENERATOR ADJ.....CUA,CUB,CUC	EA	1
33	14	PAOZZ	3030-00-017-9733	96906	MS51065-34-2	.BELT,DRIVE.....CCC	ST	2
33	14	PAOZZ	3030-00-740-3650	72582	5100366	.BELTS,V,MATCHED SET 43 INCH X 3/8 X 38 DEGREES....CUA,CUB,CUC	SE	1
33	15	XBOZZ	5305-00-688-2111	24617	186612	.BOLT,MACHINE.....CCC	EA	4
33	15	XBOZZ		72582	106337	.BOLT 7/16-14X 3/8.....CUA,CUB,CUC	EA	1
33	16	PAOZZ	5310-00-061-1258	24617	178551	.WASHER,LOCK.....CCC	EA	4
33	16	PAOZZ	5310-00-080-9785	96906	MS45904-80	.WASHER,LOCK 7/16 INT EXT TOOTH CAD.....CUA,CUB,CUC	EA	2
33	17	PBOZZ	5365-00-001-5102	72582	5125294	.SPACER.....CCC	EA	2
33	17	XDOZZ		72582	5164360	.WASHER 15/32X15/16X5/32.....CUA,CUB,CUC	EA	1
33	18	PAOZZ	5305-00-543-2419	96906	MS90728-61	.BOLT,MACHINE	EA	6
33	19	PAOZZ	5310-00-061-1258	24617	178551	.WASHER,LOCK	EA	6
33	20	XBOZZ		72582	5126936	.BRACKET,GENERATOR.....CCC	EA	2
33	20	XBOZZ	2920-00-932-4847	72582	5136712	.BRACKET,GENERATOR.....CUA,CUB,CUC	EA	1
33	21	PAOZZ		97403	13222E9865	.CABLE ASSY,ELECTRIC	EA	1
33	22	PAOFF	2920-00-391-2989	16764	1105993	.GENERATOR ASSY,24 VOLT.....CCC	EA	2
33	22	PAOFF		19728	GHT6002TS	.GENERATOR,ENGINE AC 18V 18AMP NEG GRD.....CUA,CUB,CUC	EA	1

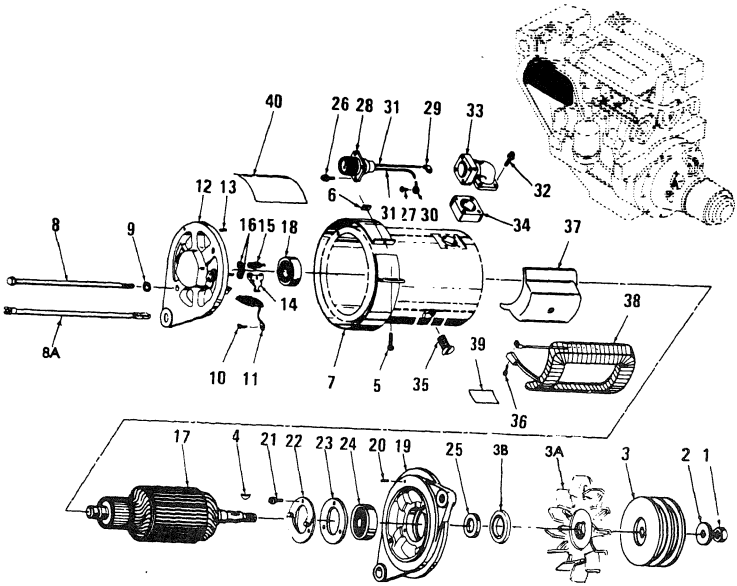

Figure 34. Generator

(1) ILLUSTRATION (a) FIG NO	(b) ITEM NO	(2) SMR CODE	(3) NATIONAL STOCK NUMBER	(4) FSCM	(5) PART NUMBER	(6) DESCRIPTION USABLE ON CODE	(7) U/M	(8) QTY INC IN UNIT
34	1	XBOZZ		16764	274983	..NUT PLAIN HEXAGON.....CCC	EA	4
34	1	XDOZZ		19728	90-727	..NUT AND WASHER PK.....CUA,CUB,CUC	EA	1
34	2	PAOZZ		16764	1918043	..WASHER, FLAT.....CCC	EA	4
34	3	PAOZZ		72582	5121246	..PULLEY, GROOVE.....	EA	2

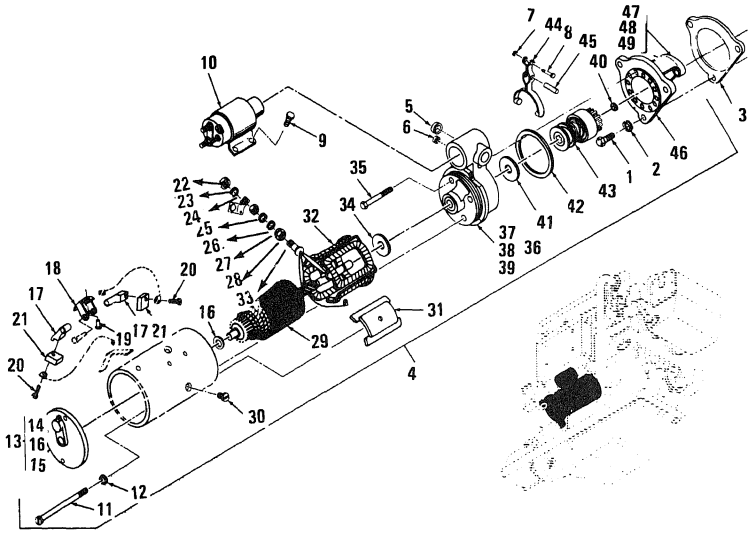

Figure 35. Cranking Motor (Starter)

(1) ILLUSTRATION (a) FIG NO	(b) ITEM NO	(2) SMR CODE	(3) NATIONAL STOCK NUMBER	(4) FSCM	(5) PART NUMBER	(6) DESCRIPTION USABLE ON CODE	(7) U/M	(8) QTY INC IN UNIT
35	1	PAOZZ	5306-00-064-5356	16764	9418228	.BOLT,MACHINE MOTOR MTG,5/8-11 X 1 3/4 12 PNT.....	EA	3
35	2	PAOZZ	5310-00-820-6653	96906	MS35338-50	.WASHER,LOCK MOTOR BOLT,5/8 IN.....	EA	6
35	3	XAOZZ		72582	5130995	.GASKET.....	EA	2
35	4	PAOFF	2920-00-229-2668	16764	1113221	.MOTOR GRANKING 24 VOLT.....	EA	2

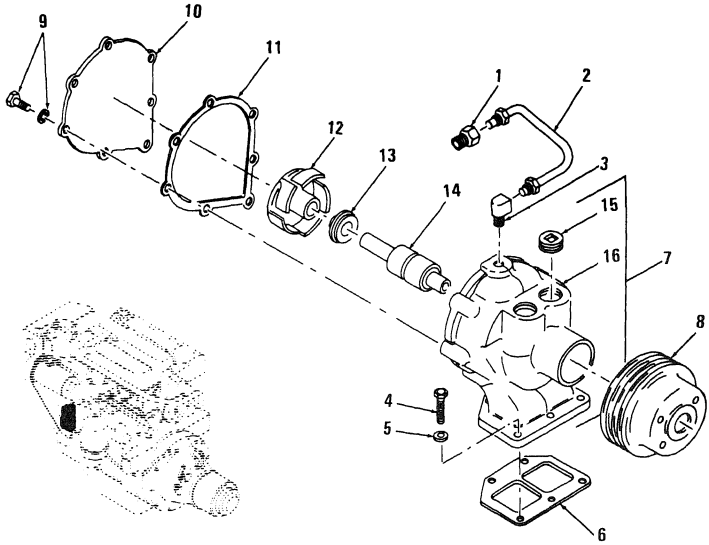

Figure 36. Water Pump

(1) RATION (b) ITEM NO	(2) SMR CODE	(3) NATIONAL STOCK NUMBER	(4) FSCM	(5) PART NUMBER	(6) DESCRIPTION USABLE ON CODE	(7) U/M	(8) QTY INC IN UNIT
1	PAOZZ	4730-00-540-2612	72582	137405	.CONNECTOR,TUBE.....	EA	2
2	PAOZZ	4710-00-001-3379	72582	5123166	.TUBE ASSEMBLY,METAL VENT,WATER PUMP.....	EA	2
3	PAOZZ	4730-00-277-8273	72582	137421	.ELBOW.....	EA	2
4	PAOZZ	5306-00-226-4826	96906	MS90728-33	.BOLT,MACHINE WATER PUMP,5/16-18 X 7/8 IN.....	EA	10
5	PAOZZ	5310-00-407-9566	96906	MS35338-45	.WASHER,LOCK WATER PUMP,5/16 IN.....	EA	10
7	PAOZZ	2930-00-246-5305	72582	5144686	.PUMP ASSEMBLY FRESH WATER RH.....	EA	2
15	XDOZZ	4730-00-152-6233	72582	5145009	.PLUG,PIPE FRESH WATER.....	EA	2

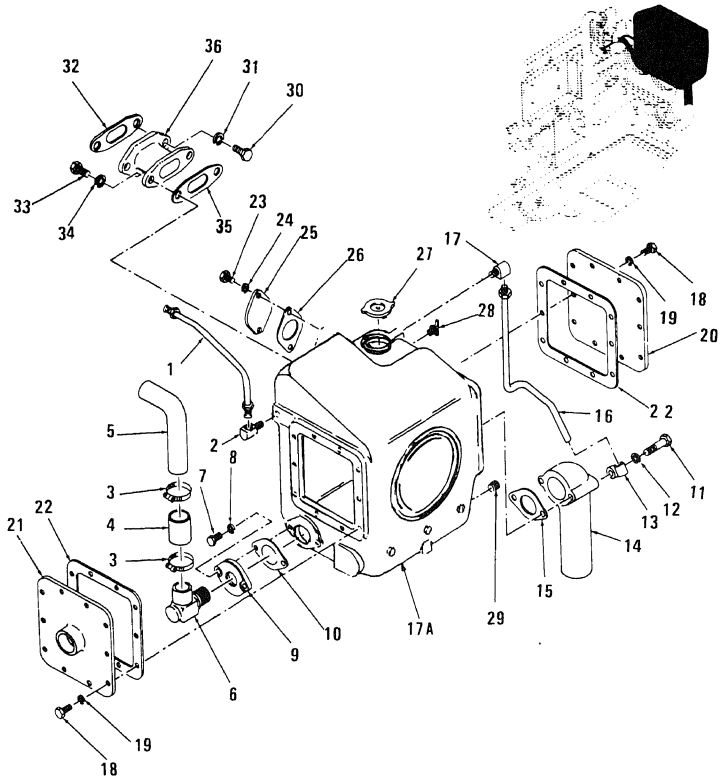

Figure 37. Expansion Tank

(1) ILLUSTRATION (a) FIG NO	(b) ITEM NO	(2) SMR CODE	(3) NATIONAL STOCK NUMBER	(4) FSCM	(5) PART NUMBER	(6) DESCRIPTION USABLE ON CODE	(7) U/M	(8) QTY INC IN UNIT
37	1	PBOZZ	4720-00-432-1266	72582	5126315	.TUBE ASSY,VENT	EA	2
37	2	XBOZZ		24617	137421	.ELBOW,TUBE	EA	2
37	3	PAOZZ	4730-00-202-8970	72582	5186840	.CLAMP WATER BYPASS	EA	4
37	4	PAOZZ	4720-00-278-5050	72582	5156170	.HOSE,NONMETALLIC WATER BYPASS	EA	2
37	5	XBOZZ		72582	5122563	.TUBE WATER BYPASS	EA	2
37	6	XBOZZ	4730-00-019-4727	72582	5181801	.ELBOW,PIPE TO HOSE WATER BYPASS	EA	2
37	7	PAOZZ	5306-00-226-4826	96906	MS90728-33	.BOLT,MACHINE	EA	4
37	8	XBOZZ	4730-00-902-1949	72582	5119425	.FLANGE,PIPE	EA	1
37	10	PAOZZ	5330-00-613-9397	72582	5116357	.GASKET WATER BYPASS	EA	2
37	11	XDOZZ	5306-00-021-2517	24617	179826	.BOLT,MACHINE 5/16-18 X 12	EA	1
37	12	PAOZZ	5310-00-407-9566	96906	MS35338-45	.WASHER,LOCK	EA	4
37	13	PAOZZ	5340-00-282-7532	96906	MS21333-56	.CLAMP	EA	2
37	14	XBOZZ		72582	5121203	.ELBOW	EA	2
37	15	PAOZZ	5330-00-613-9397	72582	5116357	.GASKET	EA	2
37	16	XBOZZ		72582	5122569	.TUBE,OVERFLOW	EA	2
37	17	XBOZZ	4730-00-640-1051	72582	137422	.ELBOW	EA	2
37	17A	XBOZZ		72582	5125066	.TANK ASSY EXPANSION	EA	2
37	18	XBOZZ	5306-00-225-8500	96906	MS90825-35	.BOLT,MACHINE	EA	10
37	19	PAOZZ	5310-00-407-9566	96906	MS35338-45	.WASHER,LOCK	EA	40
37	20	XBOZZ		72582	5186976	.COVER CYLINDER HEAD WATER HOLE	EA	2
37	21	XBOZZ	2930-00-590-9041	72582	5121893	.COVER,INLET	EA	2
37	22	PAOZZ	5330-00-292-3482	72582	5167764	.GASKET HEAT EXCHANGER	EA	4
37	23	PAOZZ	5306-00-226-4826	96906	MS90728-33	.BOLT,MACHINE	EA	4
37	24	PAOZZ	5310-00-407-9566	96906	MS35338-45	.WASHER,LOCK	EA	4
37	25	XBOZZ		72582	5125655	.COVER,REAR	EA	2
37	26	PAOZZ	5330-00-469-8234	72582	5119206	.GASKET REAR COVER	EA	2
37	27	PAOZZ	2930-00-462-8114	72582	850901	.CAP,FILLER OPENING	EA	2
37	28	PAOZZ	4820-00-845-1096	72582	148344	.DRAINCOCK	EA	2
37	29	PAOZZ	5340-00-919-2876	72582	5109157	.PLUG,PIPE	EA	2
37	30	PAOZZ	5305-00-543-2419	96906	MS90728-61	.BOLT,MACHINE	EA	4
37	31	PAOZZ	5310-00-061-1258	24617	178551	.WASHER,LOCK	EA	4
37	32	XAOZZ		72582	5116212	.GASKET,BRACKET	EA	2
37	33	PAOZZ	5305-00-543-2419	96906	MS90728-61	.BOLT,MACHINE	EA	8
37	34	PAOZZ	5310-00-061-1258	24617	178551	.WASHER,LOCK	EA	4
37	35	XAOZZ		72582	5116242	.GASKET COVER,WATER HOLE	EA	2
37	36	XBOZZ		72582	5119158	.BRACKET HEAT EXCHANGER	EA	2

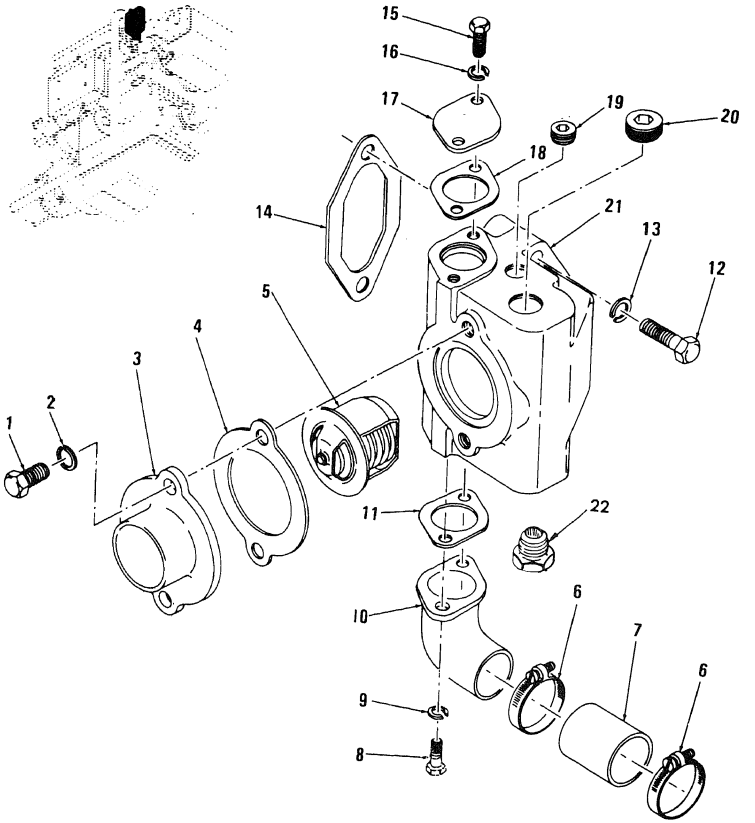

Figure 38. Thermostat and Housing

(1) ILLUSTRATION (a) FIG NO	(b) ITEM NO	(2) SMR CODE	(3) NATIONAL STOCK NUMBER	(4) FSCM	(5) PART NUMBER	(6) DESCRIPTION USABLE ON CODE	(7) U/M	(8) QTY INC IN UNIT
38	1	PAOZZ	5306-00-226-4824	96906	MS90728-31	.BOLT,MACHINE	EA	4
38	2	PAOZZ	5310-00-407-9566	96906	MS35338-45	.WASHER,LOCK THERMOSTAT HOUSING,3/8 IN	EA	4
38	3	XBOZZ		72582	5119120	.FLANGE THERMOSTAT HOUSING	EA	2
38	4	XBOZZ		72582	5128139	.GASKET FLANGE,THERMOSTAT HOUSING	EA	2
38	5	PAOZZ	6620-00-792-9032	72582	3146695	.THERMOSTAT,FLOW CON	EA	2
38	6	PAOZZ	4730-00-202-8970	72582	5186840	.CLAMP HOSE	EA	4
38	7	PAOZZ	4720-00-278-5050	72582	5156170	.HOSE,NONMETALLIC	EA	2
38	8	PAOZZ	5306-00-226-4828	96906	MS90728-35	.BOLT,MACHINE THERMOSTAT HOUSING MTG,3/8-16 X 2-1/8 IN	EA	4
38	9	PAOZZ	5310-00-407-9566	96906	MS35338-45	.WASHER LOCK OUTLET FLANGE,THERMOSTAT,5/16 IN	EA	4
38	10	PAOZZ	4730-00-019-4727	72582	5181801	.ELBOW	EA	2
38	11	PAOZZ	5330-00-613-9397	71582	5116357	.GASKET	EA	2
38	12	PAOZZ	5305-00-018-7069	24617	108608	.BOLT,MACHINE THERMOSTAT,3/8-16 X 2 1/8 IN.LG	EA	4
38	13	PAOZZ	5310-00-637-9541	96906	MS35338-46	.WASHER,LOCK THERMOSTAT BOLT,3/8 IN	EA	4
38	14	PAOZZ	5330-00-055-1584	72582	5116242	.GASKET THERMOSTAT HOUSING	EA	2
38	15	XBOZZ		96906	01028PC11	.BOLT,MACHINE	EA	4
38	16	PAOZZ	5310-00-637-9541	96906	MS35338-46	.WASHER,LOCK THERMOSTAT HSG MTG	EA	4
38	17	XBOZZ		72582	5119426	.FLANGE OUTLET	EA	2
38	18	PAOZZ	5330-00-055-1587	72582	5119427	.GASKET FLANGE,THERMOSTAT	EA	2
38	19	PAOZZ	4730-00-152-6073	72582	5145014	.PLUG,PIPE	EA	4
38	20	PAOZZ	4730-00-152-6070	72582	5115214	.PLUG,PIPE	EA	4
38	21	XBOZZ	2930-00-112-0437	72582	5123247	.HOUSING ASSEMBLY THERMOSTAT	EA	2
38	22	XDOZZ	4730-00-608-1777	24617	859151	.ADAPTER CAPILLARY,WATER TEMP GAGE	EA	1

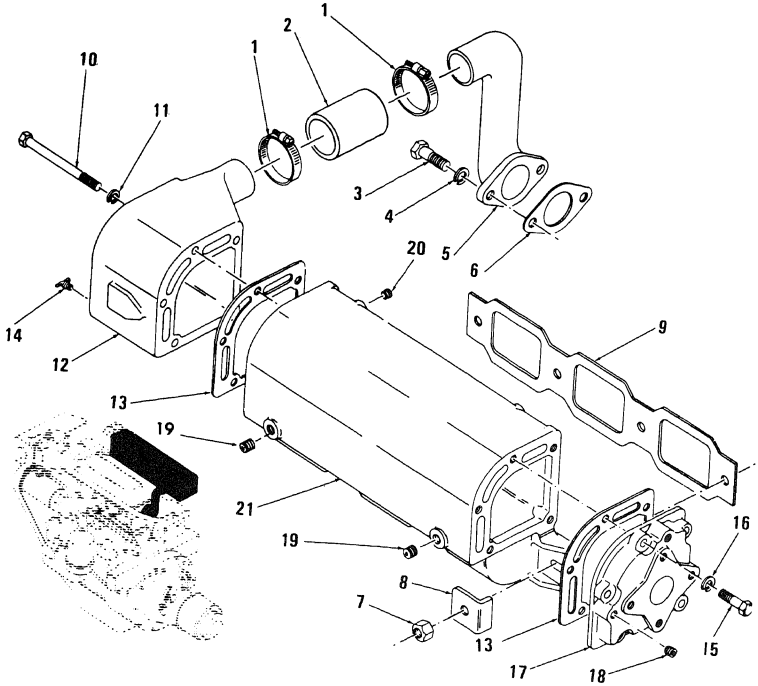

Figure 39. Exhaust Manifold

(1) ILLUSTRATION (a) FIG NO	(b) ITEM NO	(2) SMR CODE	(3) NATIONAL STOCK NUMBER	(4) FSCM	(5) PART NUMBER	(6) DESCRIPTION USABLE ON CODE	(7) U/M	(8) QTY INC IN UNIT
39	1	PAOZZ	4730-00-921-5387	72582	5186841	.CLAMP,HOSE	EA	4
39	2	XBOZZ		72582	5140551	.HOSE	EA	2
39	4	PAOZZ	5310-00-637-9541	96906	MS35338-46	.WASHER,LOCK EXHAUST MANIFOLD,3/8 IN	EA	10
39	5	XBOZZ		72582	5130451	.ELBOW WATER CONNECTION	EA	2
39	6	XDOZZ	5330-00-055-1584	72582	5116242	.GASKET CYLINDER HEAD WATER HOLE	EA	2
39	7	PAOZZ	5310-00-880-7745	96906	MS51968-11	.NUT,HEXAGON EXHAUST MANIFOLD,7/16-21 IN	EA	8
39	8	PAOZZ	5310-00-595-8121	72582	5188273	.WASHER,FLAT DISHED,EXHAUST MANIFOLD STUD MTG 1-1/4 IN.OD	EA	8
39	9	XBOZZ		72582	5116205	.GASKET EXHAUST MANIFOLD	EA	2
39	10	PAOZZ	5305-00-018-6189	72582	186289	.BOLT,MACHINE EXHAUST MANIFOLD,3/8-16 X 5 IN.LG	EA	10
39	11	PAOZZ	5310-00-637-9541	96906	MS35338-46	.WASHER,LOCK EXHAUST MANIFOLD	EA	10
39	12	XBOZZ		72582	5122517	.FLANGE EXHAUST MANIFOLD	EA	2
39	13	XADZZ		72582	5119208	.GASKET WATER DISCHARGE FLANGE	EA	4
39		PAOZZ	4820-00-845-1096	24617	148344	.DRAINCOCK,SHUTOFF EXHAUST MANIFOLD,5/16 IN.DRAIN,1/4 IN.NPT	EA	2
39	15	PAOZZ	5305-00-418-2843	72582	454906	.BOLT,MACHINE	EA	10
39	16	PAOZZ	5310-00-637-9541	96906	MS35338-46	.WASHER,LOCK EXHAUST MANIFOLD	EA	10
39	17	XBOZZ		72582	5121175	.FLANGE	EA	2
39	18	PAOZZ	5365-00-708-7865	72582	5145011	.PLUG,PIPE	EA	2
39	19	PAOZZ	4730-00-187-4207	72582	5145010	.PLUG,PIPE EXHAUST MANIFOLD,1/4-18 NPTF	EA	4
39	20	XDOZZ	4730-00-152-6233	72582	5145009	.PLUG,PIPE EXHAUST MANIFOLD,1/8-27 NPTF	EA	4
39	21	XBOZZ		72582	5145201	.MANIFOLD EXHAUST WATER COOLED	EA	2

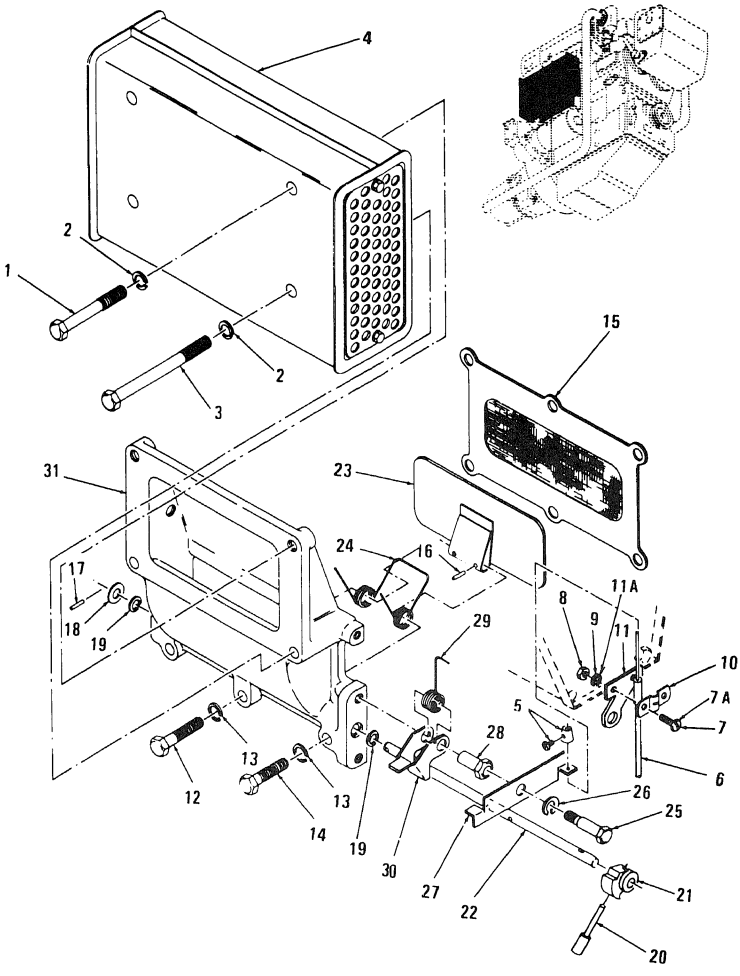

Figure 40. Air Silencer, Emergency Stop Cable and Air Shut-Down Housing

(1) ILLUSTRATION (a) FIG NO	(b) ITEM NO.	(2) SMR CODE	(3) NATIONAL STOCK NUMBER	(4) FSCM	(5) PART NUMBER	(6) DESCRIPTION USABLE ON CODE	(7) U/M	(8) QTY INC IN UNIT
40	1	XBOZZ	5306-00-637-9623	32770	186285	.BOLT,MACHINE AIR SILENCER,3/8-16 X 4 IN.....	EA	4
40	2	PAOZZ	5310-00-637-9541	96906	MS35338-46	.WASHER,LOCK AIR SILENCER.....	EA	8
40	3	XBOZZ		32770	272547	.BOLT,MACHINE AIR SILENCER.....	EA	4
40	4	XBOZZ		18265	SAM00-0127	.SILENCER,AIR.....	EA	2
40	5	XBOZZ	3040-00-233-8914	41625	AC37693	.CABLE,CONTROL EMERG.....	EA	2
40	6	PAOZZ	3040-00-229-2637	97403	13219E1132-2	.CABLE,CONTROL,EMERG CONTROL EMERGENCY STOP PORT 0.102 IN.....	EA	1
40	6	PAOZZ	3040-00-233-8914	97403	13219E1132-1	.CABLE,CONTROL EMERG EMERGENCY STOP,STBD 137 IN.....	EA	1
40	7	PAOZZ	5305-00-984-7341	96906	MS35191-273	.SCREW,MACHINE CLAMP.....	EA	4
40	7A	PAOZZ	5305-00-989-7435	96906	MS35207-264	.SCREW,MACH.....CUA,CUB,CUC	EA	11
40	8	PAOZZ	5310-00-934-9765	96906	MS35650-304	.NUT,HEXAGON.....	EA	4
40	9	PAOZZ	5310-00-933-8120	96906	MS35338-138	.WASHER,LOCK.....	EA	4
40	10	PAOZZ	2030-00-933-1630	41625	A31509	.CLAMP.....	EA	2
40	11	XBOZZ		97403	13219E1178	.BRACKET EMERGENCY SHUTOFF.....	EA	2
40	11A	PAOZZ	5310-00-531-9515	88044	AN960C416	.WASHER,FLAT.....CUA,CUB,CUC	EA	4
40	12	PAOZZ	5305-00-354-1227	72582	5157244	.BOLT,MACHINE.....	EA	4
40	13	PAOZZ	5310-00-637-9541	96906	MS35338-46	.WASHER,LOCK.....	EA	6
40	14	PAOZZ	5305-00-269-3216	96906	MS90725-66	.BOLT,MACHINE.....	EA	2
40	15	PAOZZ	5330-00-996-3720	24617	5196053	.SCREEN BLOWER AIR INLET.....	EA	1
40	16	PAOZZ	1450-00-775-1359	72582	273436	.PIN AIR INLET HOUSING SHUTDOWN VALVE.....	EA	4
40	17	PAOZZ	1450-00-775-1359	72582	273436	.PIN,ROLLER AIR INLET HOUSING.....	EA	4
40	18	XBOZZ	5310-00-080-6004	96906	MS527183-14	.WASHER,FLAT AIR INLET HOUSING SHUTDOWN VALVE.....	EA	2
40	19	PAOZZ	5330-00-682-7193	72582	5182977	.SEAL RING,AIR INLET HOUSING.....	EA	4
40	20	XBOZZ	2815-00-788-6639	72582	5114974	.HANDLE ASSEMBLY,AIR AIR INLET HOUSING SHUTDOWN.....	EA	2
40	21	XBOZZ	2910-00-765-5331	72582	5122623	.CAM,CONTROL AIR INLET HOUSING SHUTDOWN.....	EA	2
40	22	XBOZZ	2815-00-113-7926	72582	5116444	.SHAFT,AIR INLET IAR INLET HOUSING.....	EA	2
40	23	XBOZZ	2815-00-113-7925	72582	5116456	.VALVE,AIR INLET AIR INLET HOUSING SHUTDOWN.....	EA	2
40	24	PAOZZ	5360-00-745-7791	72582	5111904	.SPRING AIR INLET HOUSING SHUTDOWN.....	EA	2
40	25	XBOZZ		24617	179803	.BOLT,MACHINE.....	EA	2
40	26	PAOZZ	5310-00-637-9541	96906	MS35338-46	.WASHER,LOCK.....	EA	2
40	27	PAOZZ	2815-00-229-3309	97403	13219E1179	.LINK EMERGENCY SHUTOFF.....	EA	2
40	28	XBOZZ		72582	5143836	.SPACER.....	EA	2
40	29	PAOZZ	5360-00-712-5747	72582	5114124	.SPRING LATCH.....	EA	2
40	30	XBOZZ	2815-00-712-5749	72582	5114727	.LATCH AIR INLET HSG.....	EA	2
40	31	XBOZZ		72582	5129291	.HOUSING AIR INLET.....	EA	2

FIGURES 41 AND 42 NOT APPLICABLE

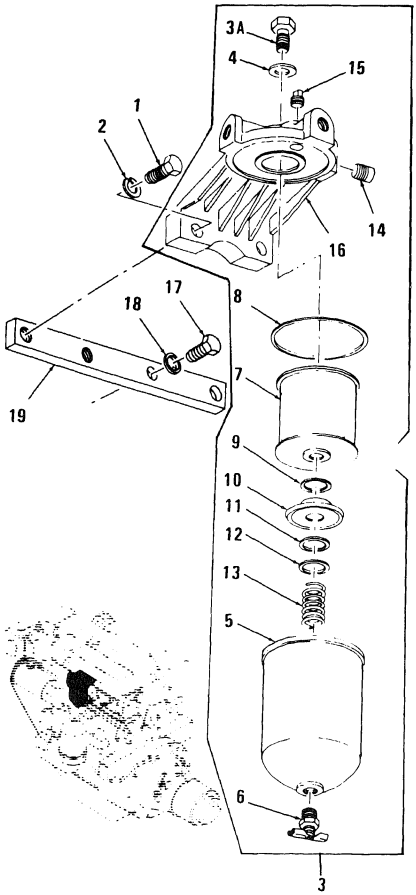

Figure 43. Fuel Filter

(1) ILLUSTRATION (a) FIG NO	(b) ITEM NO.	(2) SMR CODE	(3) NATIONAL STOCK NUMBER	(4) FSCM	(5) PART NUMBER	(6) DESCRIPTION USABLE ON CODE	(7) U/M	(8) QTY INC IN UNIT
43	1	PAOZZ	5305-00-269-3210	96906	MS90725-59	.BOLT,MACHINE	EA	4
43	2	PAOZZ	5310-00-637-9541	96906	MS35338-46	.WASHER,LOCK	EA	4
43	3	PAOZZ	4330-00-792-7343	72582	5573712	.FILTER ASSY FUEL OIL	EA	2
43	3A	PAOZZ	5306-00-604-7961	72582	5574118	.BOLT,MACHINE	EA	2
43	4	PAOZZ	5310-00-551-0433	72582	1503536	.GASKET COVER,FILTER	EA	2
43	5	XAOZZ		72582	5574125	..FILTER BODY,FLUID	EA	2
43	6	PAOZZ	4820-00-477-9779	72582	103647	.COCK,DRAIN	EA	2
43	7	PAOZZ	2910-00-890-2436	72582	5573261	.ELEMENT FUEL OIL FILTER	EA	2
43	8	XAOZZ		72582	5574161	.GASKET,COVER FILTER TO SHELL (FURNISHED W/ELEMENT)	EA	2
43	9	PAOZZ	5365-00-543-3615	72582	5574120	.RETAINER	EA	2
43	10	PAOZZ	5340-00-612-3134	72582	5574123	.SEAT	EA	2
43	11	PAOZZ	5330-00-612-3123	72582	5574126	.SEAL	EA	2
43	12	PAOZZ	5310-00-655-5893	24617	5573734	.WASHER	EA	2
43	13	PAOZZ	5360-00-619-8198	72582	5574124	.SPRING	EA	2
43	14	PAOZZ	5365-00-708-7865	72582	5145011	.PLUG,PIPE	EA	2
43	15	PAOZZ	4730-00-187-4207	72582	5145010	.PLUG,PIPE	EA	2
43	16	XAOZZ		72582	6436254	.HEAD,FLUID FILTER FUEL OIL FILTER	EA	2
43	17	PAOZZ	5305-00-269-3211	96906	MS90725-60	.BOLT,MACHINE	EA	4
43	18	PAOZZ	5310-00-637-9541	96906	MS35338-46	.WASHER,LOCK	EA	16
43	19	XBOZZ		72582	5122568	.BRACKET,MOUNT	EA	2

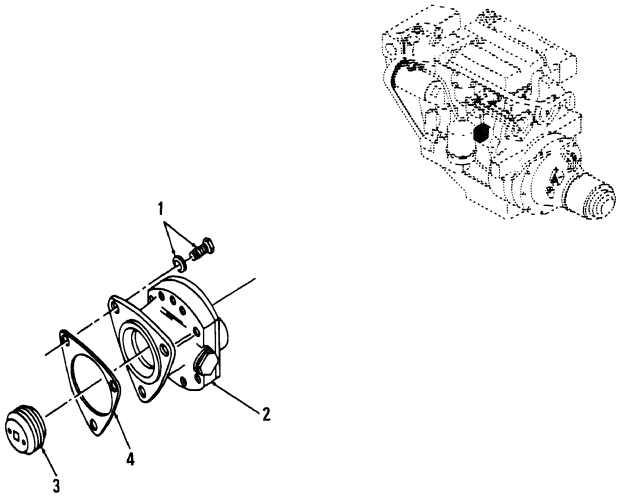

Figure 44. Fuel Pump

(1) ILLUSTRATION (a) FIG NO	(b) ITEM NO	(2) SMR CODE	(3) NATIONAL STOCK NUMBER	(4) FSCM	(5) PART NUMBER	(6) DESCRIPTION USABLE ON CODE	(7) U/M	(8) QTY INC IN UNIT
44	1	PAOZZ	5306-00-613-9396	72582	5118219	.BOLT,WITH SEAL WASHER.....	EA	6
44	2	PAOZZ	4320-00-175-9250	72582	5199560	.PUMP,ROTARY.....	EA	1
44	3	XAOZZ		72582	5154216	.COUPLING,SHAFT,RIGI DRIVE,FUEL PUMP.....	EA	2
44	4	PAOZZ	5330-00-212-6290	72582	5150193	.GASKET FUEL PUMP,TO GOVERNOR.....	EA	2

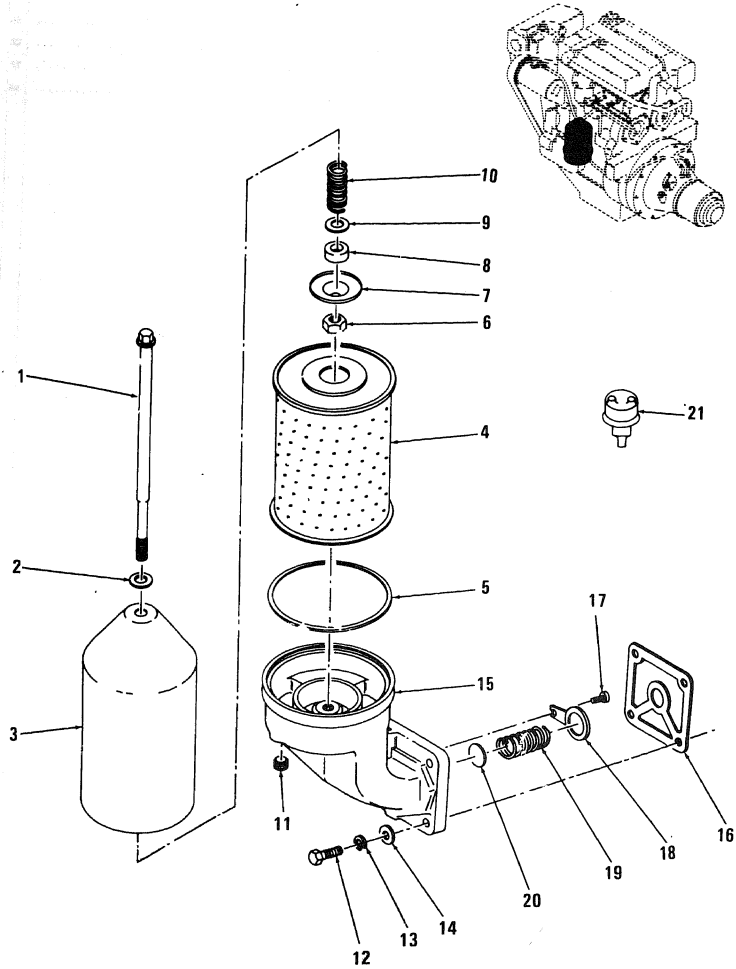

Figure 45. Engine Lubricating Oil Filter and Oil Pressure Sensor

(1) ILLUSTRATION (a) FIG NO	(b) ITEM NO	(2) SMR CODE	(3) NATIONAL STOCK NUMBER	(4) FSCM	(5) PART NUMBER	(6) DESCRIPTION USABLE ON CODE	(7) U/M	(8) QTY INC IN UNIT
45	1	PAOZZ	5307-00-765-4215	72582	5116427	.STUD CENTER,OIL FILTER.....	EA	2
45	2	XAOZZ		72582	1595620	.GASKET SHELL,OIL FILTER.....	EA	2
45	3	XBOZZ		72582	5574906	.SHELL OIL FILTER.....	EA	2
45	4	PAOZZ	2940-00-019-8087	72582	5574905	.ELEMENT OIL FILTER.....	EA	2
45	5	XAOZZ		72582	5573534	.GASKET,SHELL OIL FILTER (FURNISHED W/ELEMENT).....	EA	2
45	6	PAOZZ	5310-00-136-5712	72582	122366	.NUT,JAM,HEXAGON OIL FILTER STUD CENTER,5/8-18.....	EA	2
45	7	XBOZZ	5330-00-629-6340	72582	5187309	.RETAINER,PACKING OIL FILTER ELEMENT.....	EA	2
45	8	PAOZZ	5330-00-604-8094	72582	5187310	.PACKING PREFORMED RETAINER NUT.....	EA	2
45	9	PAOZZ	5365-00-262-4701	72582	5154538	.WASHER FLAT FILTER ELEMENT SPRING SEAT.....	EA	2
45	10	PAOZZ	5360-00-801-8731	72582	5187308	.SPRING ELEMENT RETAINER,OIL FILTER.....	EA	2
45	11	XBOZZ	4730-00-187-4207	72582	5145010	.PLUG,SOCKET HD HEXAGON,1/4-18 NPTF,ADAPTOR.....	EA	2
45	12	PAOZZ	5305-00-543-2419	96906	MS90728-61	.BOLT,MACHINE ADAPTOR MTG,3/8-16 X 1-1/8 IN.LG.....	EA	8
45	13	PAOZZ	5310-00-637-9541	96906	MS35338-46	.WASHER,LOCK ADAPTOR MTG BOLT,3/8 IN.HOLE SIZE.....	EA	8
45	14	PAOZZ	5310-00-080-6004	96906	MS27183-14	.WASHER FLAT ADAPTOR MTG BOLT.....	EA	8
45	15	XBOZZ		72582	5134311	.ADAPTOR OIL FILTER.....	EA	2
45	16	XBOZZ		72582	5121205	.GASKET ADAPTOR,OIL FILTER.....	EA	2
45	17	PAOZZ	5305-00-930-3427	72582	450865	.SCREW,ROUND HEAD RETAINER MTG,12-24 X 3/4 IN.LG.....	EA	2
45	18	XBOZZ	2815-00-905-7917	72582	5134456	.RETAINER PRESSURE REGULATING SPRING,OIL FILTER.....	EA	2
45	19	PAOZZ	5360-00-930-3264	72582	5134477	.SPRING,HELICAL,COMP PRESSURE REGULATING,OIL FILTER.....	EA	2
45	20	PAOZZ	2940-00-944-6249	72582	5133431	.DISK,VALVE PRESSURE REGULATOR,OIL FILTER.....	EA	2
45	21	PAOZZ	5930-00-669-7872	72582	1506983	.SWITCH OIL PRESSURE SENSOR.....	EA	2

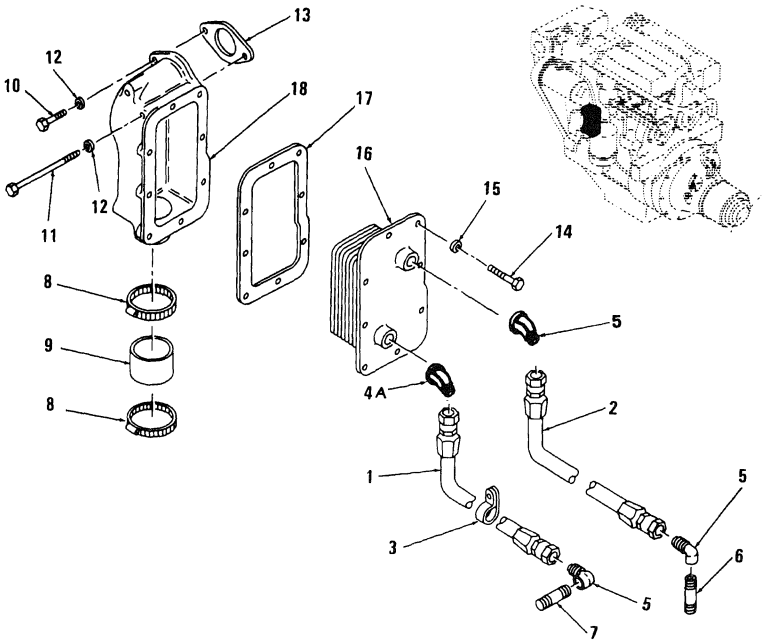

Figure 46. Transmission Oil Cooler

(1) ILLUSTRATION (a) FIG NO.	(b) ITEM NO.	(2) SMR CODE	(3) NATIONAL STOCK NUMBER	(4) FSCM	(5) PART NUMBER	(6) DESCRIPTION USABLE ON CODE	(7) U/M	(8) QTY INC IN UNIT
46	1	PAOZZ	4720-00-174-3004	72582	5123320	.HOSE ASSEMBLY OIL INLET,OIL COOLER TO GEAR SUMP,MARINE GEAR, 38 X 13/32 IN.ID.....	EA	2
46	2	PAOZZ	4720-00-413-3406	72582	5123318	.HOSE ASSEMBLY OIL OUTLET SELECTOR VALVE TO OIL COOLER,MARINE GEAR,47 X 13/32 IN.ID.....	EA	2
46	3	PAOZZ	5340-00-499-3597	72582	5171509	.CLIP TUBE,GEAR TO COOLER HOSES.....	EA	8
46	4	PAOZZ	4730-00-254-6215	96906	MS39162-7	.ELBOW,TUBE OIL OUTLET AND OIL INLET HOSES,MARINE GEAR,1/2 IN CCC	EA	4
46	4A	PAOZZ	4730-00-230-2971	72582	5130294	.ELBOW,OIL DRAIN 45 DEG.....CUA,CUB,CUC	EA	2
46	5	PAOZZ	4730-00-277-4377	72582	120142	.ELBOW,TUBE OIL OUTLET AND OIL INLET HOSES,MARINE GEAR,3/8IN.	EA	4
46	6	XBOZZ		72582	144603	.NIPPLE,PIPE OIL OUTLET ELBOW,MARINE GEAR,3/8 X 3 IN.....	EA	2
46	7	XDOZZ	4730-00-837-0816	72582	144606	.NIPPLE,PIPE OIL INLET ELBOW MARINE GEAR,3/8 X 1 1/2 IN.....	EA	2
46	8	PAOZZ	4730-00-921-5387	72582	5186841	.CLAMP,OIL COOLER WATER INLET,1 9/16 - 2 1/2 IN.DIA.....	EA	4
46	9	XBOZZ		72582	5185887	.HOSE,OIL COOLER WATER INLET,1 7/8 X 1 1/2 IN.....	EA	2
46	10	PAOZZ	5306-00-225-8500	96906	MS90725-35	.BOLT,MACHINE OIL COOLER HOUSING TO BLOCK,5/16-18 X 1 1/8 IN. LG.....	EA	2
46	11	PAOZZ	5306-00-150-1837	72582	186274	.BOLT,MACHINE OIL COOLER HOUSING TO BLOCK,5/16-18 X 5 IN.LG..	EA	2
46	12	PAOZZ	5310-00-407-9566	96906	MS35338-45	.WASHER,LOCK OIL COOLER HOUSING BOLT MTG,5/16 IN.....	EA	2

FIGURE 47 NOT APPLICABLE

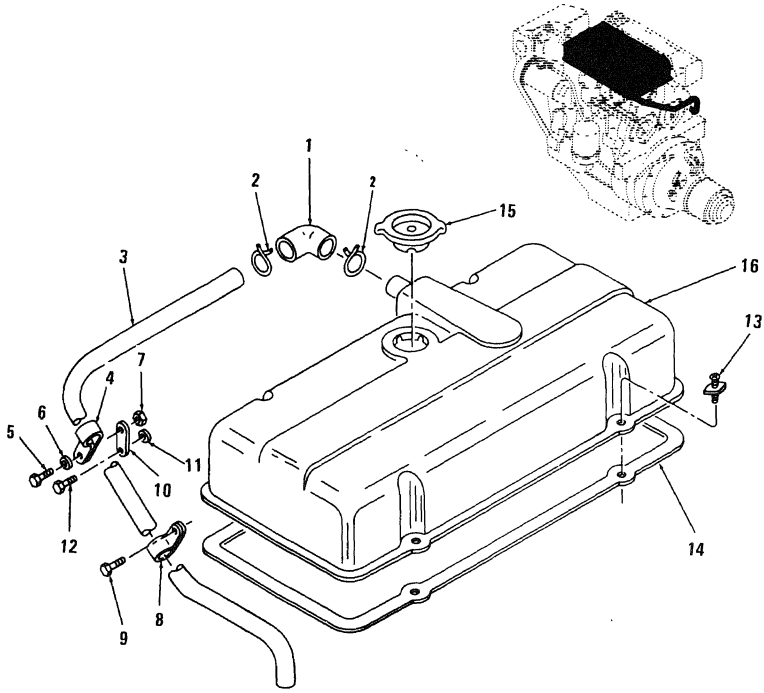

Figure 48. Valve Rocker Cover

ILLUSTRATION (a) FIG NO.	(b) ITEM NO	SMR CODE	NATIONAL STOCK NUMBER	FSCM	PART NUMBER	DESCRIPTION USABLE ON CODE	U/M	QTY INC IN UNIT
48	1	PAOZZ	4720-00-902-1549	72582	5130140	.HOSE,VENT,ROCKER COVER.....	EA	2
48	2	PAOZZ	4730-00-922-2015	72582	272857	.CLAMP,HOSE.....	EA	4
48	3	XBOZZ		72582	5130442	.PIPE,EXTENSION BREATHER,1 IN.OD X 41 IN.LG.....	EA	2
48	4	XBOZZ	5340-00-061-2184	72582	5183247	.CLAMP,LOOP ROCKER COVER,1 IN.PIPE.....	EA	2
48	5	PAOZZ	5305-00-269-3209	96906	MS90725-58	.BOLT,MACHINE BREATHER PIPE CLIP MTG,3/8-16 X 3/4 IN.LG.....	EA	2
48	6	PAOZZ	5310-00-637-9541	96906	MS35338-46	.WASHER,LOCK BREATHER PIPE MTG BOLT,3/8 IN.....	EA	2
48	7	PAOZZ	5310-00-732-0558	96906	MS51967-8	.NUT,PLAIN, HEXAGON BREATHER PIPE MTG BOLT,3/8-16 IN.....	EA	2
48	8	PAOZZ	5340-00-001-4996	72582	5161874	.CLIP,TUBE ROCKER COVER,1-1 1/16 IN.DIA.....	EA	2
48	9	PAOZZ	5305-00-269-3209	96906	MS90725-58	.BOLT,MACHINE BREATHER PIPE CLIP MTG,3/8-24 X 3-9 1/16 IN.LG..	EA	2
48	10	XBOZZ		72582	5173189	.BRACKET,BREATHER CLIP.....	EA	2
48	11	XBOZZ		24617	5164789	.SPACER BREATHER CLIP MTG,13/32 ID X 7/8 IN.....	EA	2
48	12	PAOZZ	5305-00-269-2819	96906	MS90726-75	.BOLT,MACHINE BREATHER PIPE BRACKET MTG,3/8-24 X 4 1/4 IN.LG..	EA	2
48	13	PAOZZ	2815-00-074-1929	72582	5100104	.CLAMP AND SCREW,ROCKER COVER MTG.....	EA	8
48	14	PAOZZ	5330-00-792-9026	72582	5119457	.GASKET,ROCKER COVER.....	EA	2
48	15	PAOZZ	2815-00-042-6545	78225	AAI3253	.CAP ASSEMBLY OIL FILLER ROCKER COVER.....	EA	2
48	16	XBOZZ		72582	5128372	.COVER ASSEMBLY,ROCKER ARM WITH FILLER BREATHER.....	EA	2

FIGURES 49 THRU 60 NOT APPLICABLE

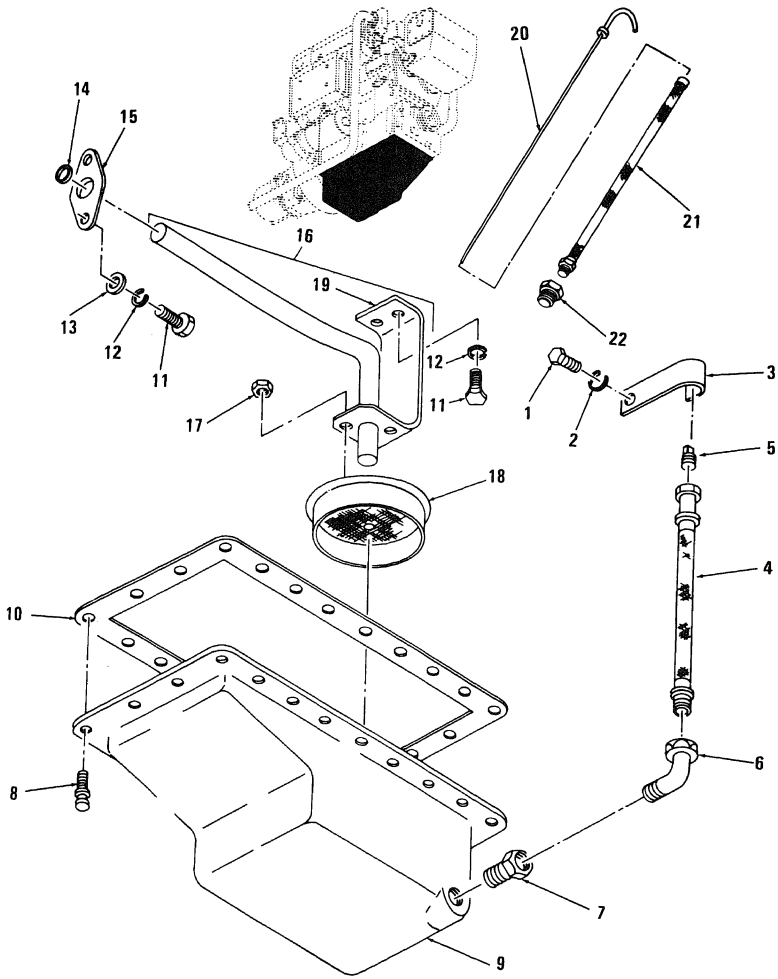

Figure 61. Oil Pan, Inlet Pipe, Screen and Dipstick

(1) ILLUSTRATION (a) FIG NO.	(b) ITEM NO.	(2) SMR CODE	(3) NATIONAL STOCK NUMBER	(4) FSCM	(5) PART NUMBER	(6) DESCRIPTION USABLE ON CODE	(7) U.M.	(8) QTY INC IN UNIT
61	20	PAOZZ	6680-00-231-0786	72582	5109255	.GAGE ROD-CAP,LIQUID.....	EA	3
61	21	XBOZZ	4730-00-424-4019	72582	5121062	.GUIDE,DIP STICK.....	EA	2
61	22	XBOZZ		72582	5109774	.ADAPTER ASSEMBLY.....	EA	2

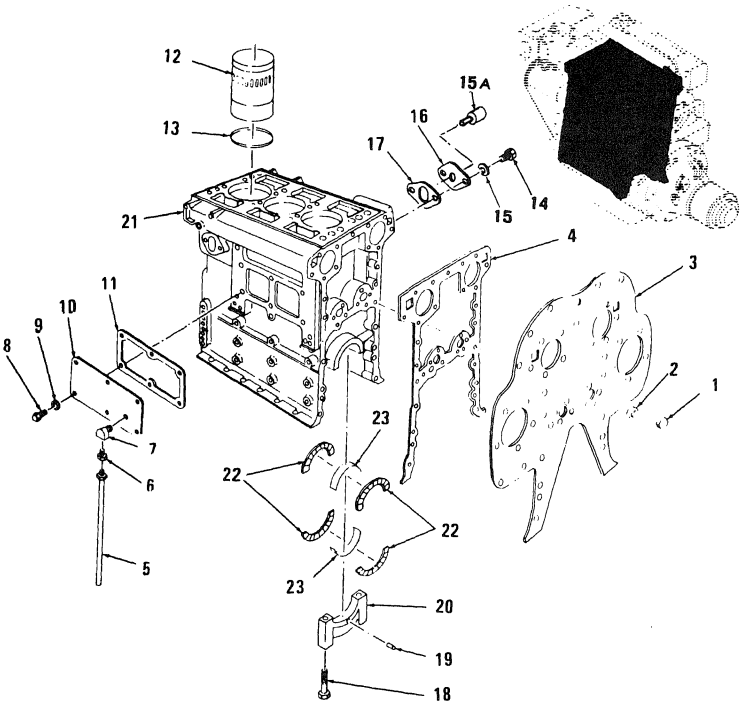

Figure 62. Cylinder Block

(1) ILLUSTRATION (a) FIG NO	(b) ITEM NO.	(2) SMR CODE	(3) NATIONAL STOCK NUMBER	(4) FSCM	(5) PART NUMBER	(6) DESCRIPTION USABLE ON CODE	(7) U/M	(8) QTY INC IN UNIT
62	15A	PAOZZ		72582	5146080	.SWITCH WATER TEMP SENSOR.....	EA	1

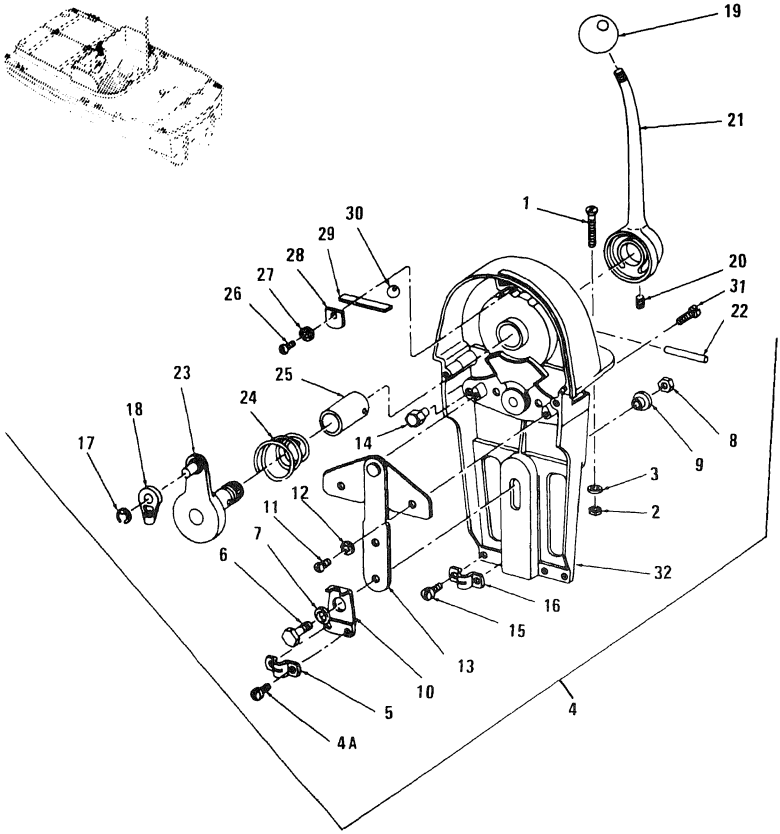

Figure 63. Throttle and Transmission Control Head

(1) ILLUSTRATION (a) FIG NO.	(b) ITEM NO.	(2) SMR CODE	(3) NATIONAL STOCK NUMBER	(4) FSCM	(5) PART NUMBER	(6) DESCRIPTION USABLE ON CODE	(7) U/M	(8) QTY INC IN UNIT
						GROUP 11 TRANSMISSION		
63	1	PAOZZ	5305-00-984-7342	96906	MS35191-274	SCREW,MACHINE	EA	4
63	2	PAOZZ	5310-00-877-5797	96906	MS21044N3	NUT,HEXAGON	EA	4
63	3	PAOZZ	5310-00-809-8546	96906	MS27183-8	WASHER,PLAIN	EA	4
63	4	XBOZZ	2990-00-836-8338	41625	D67979	CONTROL, THROTTLE AND TRANSMISSION	EA	2
63	4A	XBOZZ	5305-00-984-6207	96906	MS35206	.SCREW,MACHINE	EA	8
63	5	XBOZZ		41625	A32010	.CLAMP,CABLE	EA	4
63	6	PAOZZ	5305-00-993-2459	96906	MS35207-283	.SCREW,MACHINE	EA	4
63	7	XBOZZ		41625	A48676	.BUSHING,SHOULDER	EA	4
63	8	PAOZZ	5310-00-483-8791	96906	MS17829-4F	.NUT,HEXAGON	EA	4
63	9	XBOZZ		41625	A32963	.COLLAR,RETAINER	EA	4
63	10	XBOZZ		41625	A32011	.BRACKET,SWIVEL	EA	4
63	11	PAOZZ	5305-00-984-6208	96906	MS35206-261	.SCREW,MACHINE	EA	8
63	12	PAOZZ	5310-00-209-1239	96906	MS35335-60	.WASHER,LOCK	EA	8
63	13	XBOZZ		96906	A32962	.PLATE AND LINK	EA	4
63	14	PAOZZ	5940-00-110-2816	41625	A32784	.TERMINAL CABLE THROTTLE	EA	4
63	15	XBOZZ	5305-00-984-6207	96906	MS35206260	.SCREW,MACHINE	EA	8
63	16	XBOZZ		41625	A32010	.CLAMP.CABLE	EA	4
63	17	PAOZZ	5365-01-143-0054	41625	A51304-135	.RING,RETAINING	EA	4
63	18	XBOZZ		41625	A31980	.TERMINAL CABLE THROTTLE	EA	4
63	19	XBOZZ		41625	A35232-1	.BALL,KNOB	EA	4
63	20	PAOZZ	5305-00-724-5903	96906	MS51963-85	.SCREW SET	EA	4
63	21	XBOZZ		41625	D32778	.LEVER,CONTROL	EA	4
63	22	PAOZZ	5315-00-200-3183	96906	MS171598	.PIN	EA	4
63	23	XBOZZ		41625	A32770	.ARM,THROTTLE	EA	4
63	24	PAOZZ	5360-00-001-5003	41625	A32790	.SPRING,CONICAL	EA	4
63	25	XBOZZ		41625	A32788	BEARING THROTTLE ARM	EA	4
63	26	PAOZZ	5305-00-984-6208	96906	MS35206-261	.SCREW,MACHINE	EA	4
63	27	PAOZZ	5310-00-209-1239	96906	MS35225-60	.WASHER,LOCK	EA	4
63	28	PAOZZ	5340-00-011-4922	41625	A32785	.CLIP,BALL SPRING	EA	4
63	29	XBOZZ		41625	A32792	.SPRING,BALL	EA	4
63	30	PAOZZ	3110-00-100-6158	96906	MS19059-57	.BALL,BEARING	EA	4
63	31	PAOZZ	5305-00-050-9233	96906	MS51957-67	.SCREW,MACHINE	EA	4
63	32	XBOZZ		41625	E32777-2	.HOUSING	EA	4

FIGURES 64 AND 65 NOT APPLICABLE

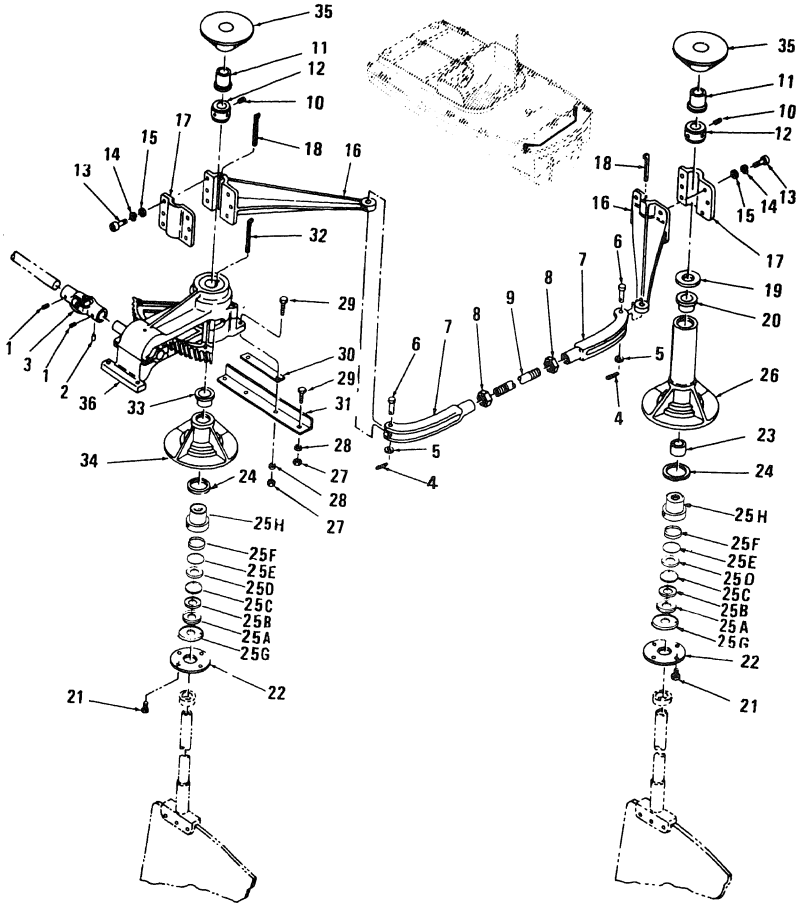

Figure 66. Rudder Linkage

(1) ILLUSTRATION (a) FIG NO	(b) ITEM NO	(2) SMR CODE	(3) NATIONAL STOCK NUMBER	(4) FSCM	(5) PART NUMBER	(6) DESCRIPTION USABLE ON CODE	(7) U/M	(8) QTY INC IN UNIT
						GROUP 12 STEERING SYSTEM		
66	1	PAOZZ	5305-00-724-5884	96906	MS51963-103	SETSCREW,HEXAGON.....	EA	2
66	2	XBOZZ		96906	MS171688	PIN,SPRING.....	EA	2
66	3	PAOZZ	2030-00-990-2186	97403	13213E5421	UNIVERSAL JOINT.....	EA	1
66	7	PAOZZ	2030-00-990-2200	97403	13213E5301	CLEVIS,RUDDER.....	EA	1
66	8	PAOZZ	5310-00-891-3425	96906	MS35691-65	NUT,HEXAGON TRANSVERSE STEERING TUBE.....	EA	2
66	9	PAOZZ	2030-00-990-2197	97403	13213E5302	TUBE,TRANSVERSE STE TRANSVERSE STEERING.....	EA	1

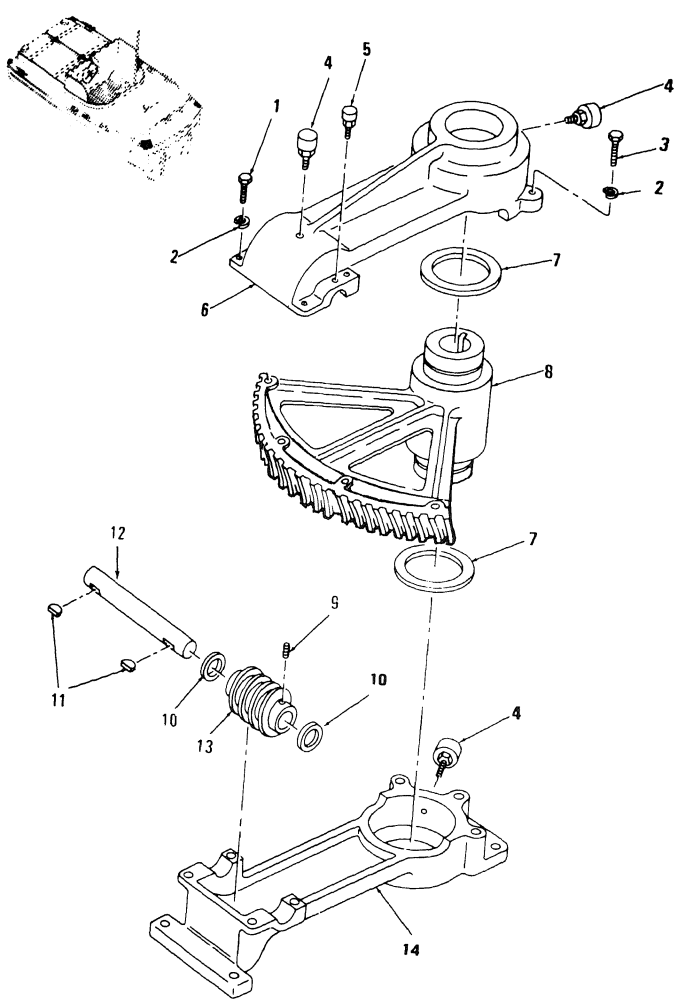

Figure 67. Steering Quadrant

(1) ILLUSTRATION (a) FIG NO	(b) ITEM NO	(2) SMR CODE	(3) NATIONAL STOCK NUMBER	(4) FSCM	(5) PART NUMBER	(6) DESCRIPTION USABLE ON CODE	(7) U/M	(8) QTY INC IN UNIT
67	4	PAOZZ	4730-00-288-8497	81349	MILC1213ATYPED	.CUP, GREASE UPPER PART QUADRANT HOUSING.....	EA	3
67	5	PAOZZ	4730-00-288-8496	22852	112464	.CUP, GREASE LOWER PART QUADRANT HOUSING.....	EA	2

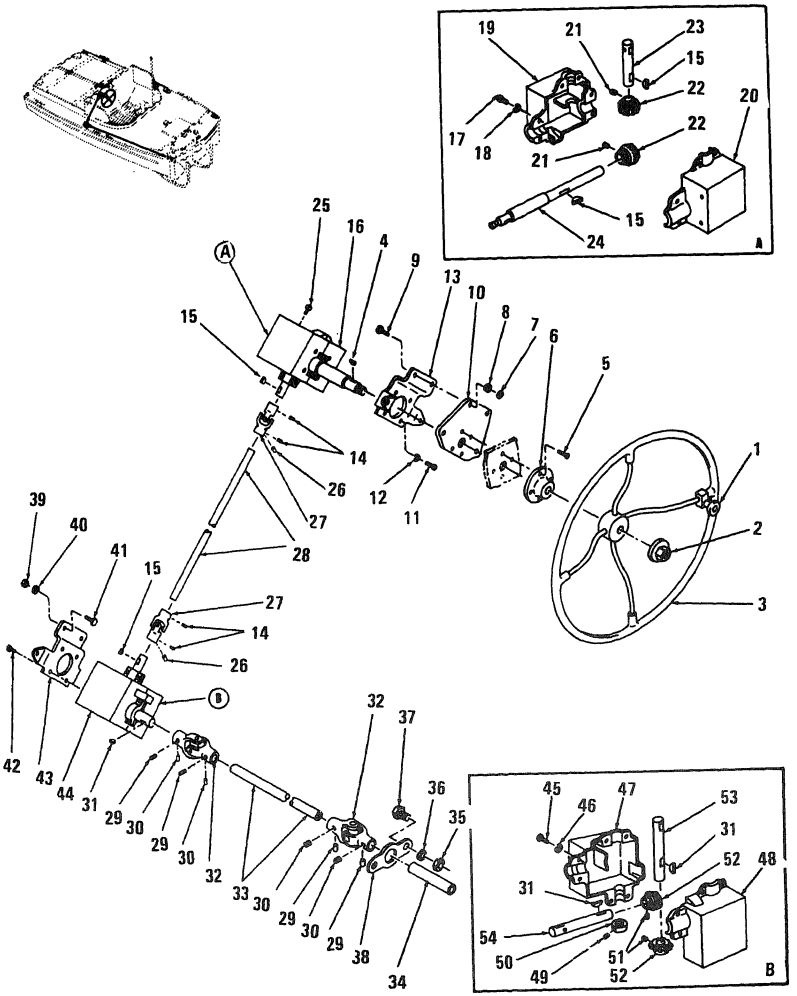

Figure 68. Steering Wheel, Linkage and Gear Boxes

(1) ILLUSTRATION (a) FIG NO	(b) ITEM NO	(2) SMR CODE	(3) NATIONAL STOCK NUMBER	(4) FSCM	(5) PART NUMBER	(6) DESCRIPTION USABLE ON CODE	(7) U/M	(8) QTY INC IN UNIT
68	1	PAOZZ		77915	6631	KNOB SPINNER STEERING	EA	1
68	2	PAOZZ	5310-00-038-2307	97403	13216E6805	NUT ASSEMBLED WASHER	EA	1
68	3	PAOZZ	2030-00-453-8974	77915	903	STEERING WHEEL, MAR I	EA	1
68	5	PAOZZ	5305-00-954-3937	96906	MS35190-290	SCREW,MACHINE FLAT COUNTERSINK HEAD,BULKHEAD FLANGE,1/4-20X 7/8 IN.LG	EA	4
68	6	XBOZZ		97403	13213E5216	FLANGE,BULKHEAD	EA	1
68	7	PAOZZ	5310-00-701-5786	96906	MS17828-6C	NUT,SELF-LOCKING UPPER GEAR BOX SPACER,3/8-16 IN	EA	4
68	8	PAOZZ	5310-00-080-6004	96906	MS27183-14	WASHER,FLAT UPPER GEAR BOX SPACER,0.406 ID X 0.812 OD X 0.065 IN.THK	EA	4
68	9	PAOZZ	5305-00-269-3215	96906	MS90725-65	SCREW,CAP,HEXAGON GEAR BOX SPACER,3/8-16 X 1-3/4 IN.LG	EA	4
68	10	XDOZZ		97403	13213E5461	SPACER UPPER GEAR BOX.....CCC,CUA	EA	1
68	11	PAOZZ	5305-00-988-1725	96906	MS35206-281	SCREW,MACHINE FLAT HEAD BULKHEAD BRACKET,1/4-20 X 3/4 IN.LG.	EA	4
68	12	PAOZZ	5310-00-194-9211	96906	MS35336-27	WASHER,LOCK BULKHEAD BRACKET	EA	4
68	13	XAOZZ		75219	9004-6	BRACKET BULKHEAD,UPPER GEAR BOX	EA	1
68	14	PAOZZ	5305-00-728-6292	96906	MS51973-75	SETSCREW UNIVERSAL JOINT,3/8-16 X 1/2 IN.LG	EA	2
68	15	XBOZZ	5315-00-616-5529	96906	MS357676	KEY,WOODRUFF UPPER GEAR BOX TO UNIVERSAL JOINT	EA	4
68	16	XDOZZ	2030-00-780-0689	75219	9004	GEAR BOX,STEERING UPPER STEERING GEAR	EA	1
68	25	XDOZZ	4730-00-001-3472	75219	4A2	.PLUG PIPE,GEAR BOX	EA	1
68	26	XBOZZ		96906	MS171688	PIN,SPRING UNIVERSAL JOINT,0.312 X 1.500 IN.LG	EA	1
68	27	XBOZZ		72447	1100SER6857-2SFM OD	JOINT,UNIVERSAL UPPER GEAR BOX SHAFT TO UPPER STEERING TUBE.	EA	2
68	28	XBOZZ		97403	13213E5304	TUBE FORWARD STEERING	EA	1
68	29	PAOZZ	5305-00-728-6286	96906	MS51973-64	SETSCREW,CONE POINT	EA	4
68	30	XBOZZ		96906	MS171688	PIN,SPRING	EA	2
68	31	PAOZZ	5315-00-616-5529	96906	MS35756-16	KEY,WOODRUFF 3-16 X 1 IN	EA	2
68	32	XBOZZ		72447	1100SERIES6857-2 SFMODIFIED	JOINT,UNIVERSAL	EA	2
68	33	XBOZZ		97403	13213E5304	TUBE,STEERING	EA	1
68	34	XBOZZ		81348	QQS763CLS316CNDA	SHAFT,STEERING 0.873 DIA	EA	1
68	35	PAOZZ	5310-00-732-0558	96906	MS51967-8	NUT,PLAIN,HEXAGON STEERING	EA	2
68	36	PAOZZ	5310-00-637-9541	96906	MS35338-46	WASHER,LOCK STEERING	EA	2
68	37	PAOZZ	5305-00-269-3211	96906	MS90725-60	SCREW,MACHINE	EA	2
68	39	PAOZZ	5310-00-701-5786	96906	MS17828-6C	NUT,SELF LOCKING HEXAGON,BULKHEAD FLANGE,3/8-16 IN	EA	4
68	40	PAOZZ	5310-00-080-6004	96906	MS27183-14	WASHER,FLAT BULKHEAD FLANGE,0.406 ID X 0.812 OD X 0.065 IN.THK	EA	4
68	41	PAOZZ	5305-00-269-3213	96906	MS90725-62	BOLT,MACH HEXAGON HEAD,BULKHEAD FLANGE,3/8-16 X 1 IN.LG	EA	4
68	42	PAOZZ	5305-00-988-1725	96906	MS35206-281	SCREW,MACHINE FLANGE	EA	4
68	43	XBOZZ		75219	9003-8	FLANGE,BULKHEAD LOWER GEAR BOX	EA	1
68	44	XDOZZ	2030-00-344-8460	92403	13213E5292	GEAR BOX LOWER STEERING GEAR	EA	1

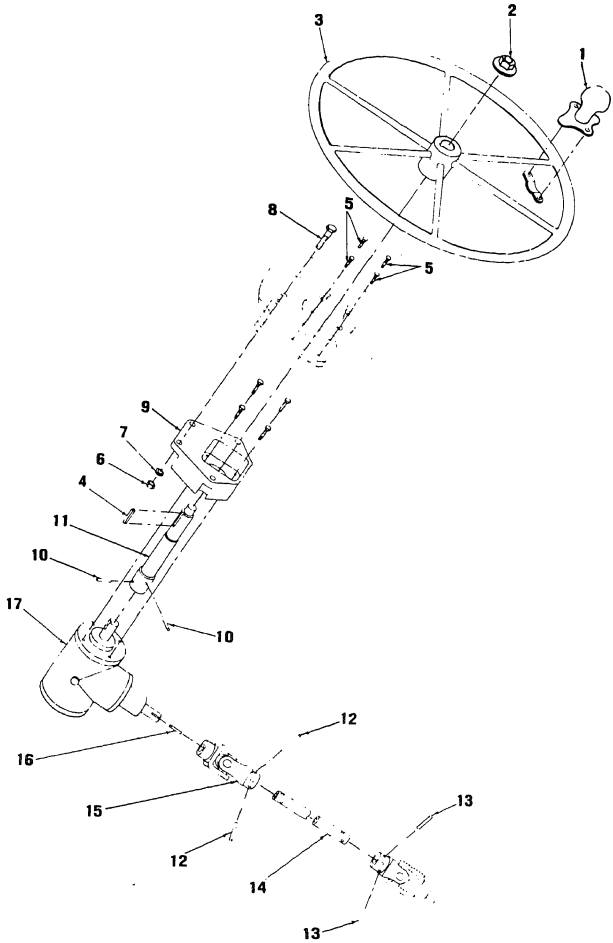

Figure 68A. Steering Wheel Linkage and Gear Box (Sheet 1 of 2)

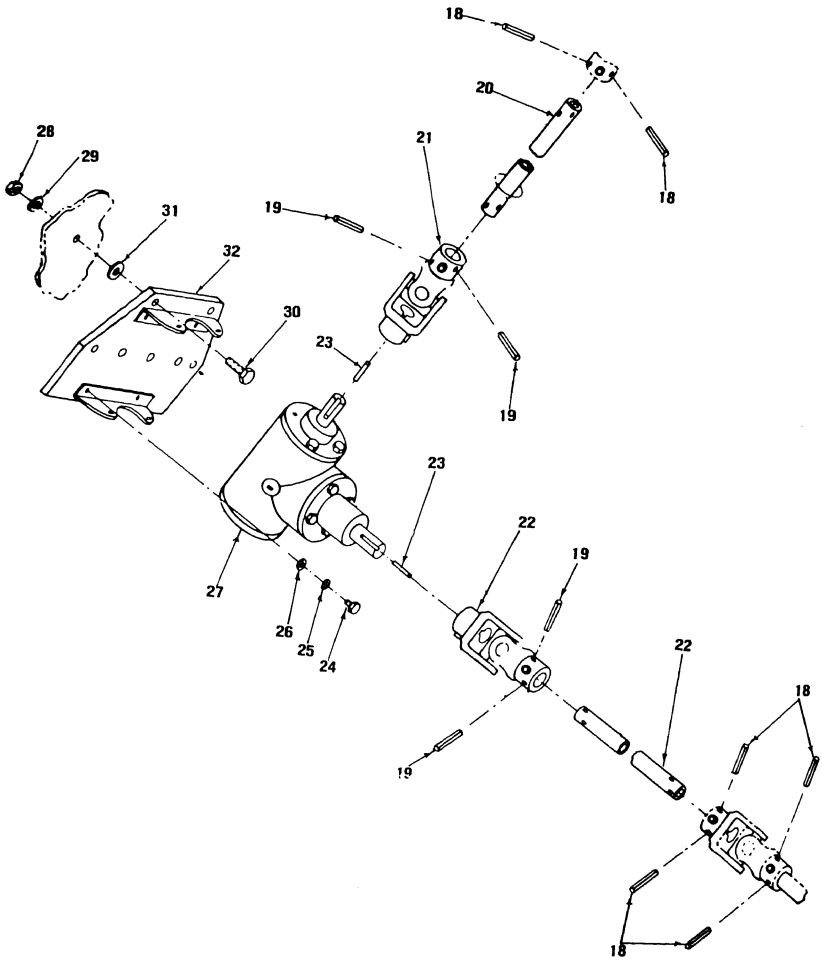

Figure 68A. Steering Wheel, Linkage and Gear Box (Sheet 2 of 2)

(1) ILLUSTRATION (a) FIG NO	(b) ITEM NO	(2) SMR CODE	(3) NATIONAL STOCK NUMBER	(4) FSCM	(5) PART NUMBER	(6) DESCRIPTION USABLE ON CODE	(7) U/M	(8) QTY INC IN UNIT
68A	1	KFOZZ		97403	13220E9267-1	KNOB,SPINNER PART OF KIT PN 13222E7263.....	EA	1
68A	2	KFOZZ		96403	13216E6805	NUT,PLAIN,EXTENDED PART OF KIT PN 13222E7263.....	EA	1
68A	3	KFOZZ		97403	13222E0552	WHEEL,STEERING PART OF KIT PN 13222E7263.....	EA	1
68A	4	KFOZZ		96906	MS20066-254	KEY,MACHINE SQUARE PART OF KIT PN 13222E7263.....	EA	1
68A	5	KFOZZ		96906	MS35190-290	SCREW,MACHINE PART OF KIT PN 13222E7263.....	ea	4
68A	6	KFOZZ		96906	MS17829-6C	NUT,SELF-LOCKING,HE PART OF KIT PN 13222E7263.....	EA	4
68A	7	KFOZZ		96906	MS27183-14	WASHER,FLAT PART OF KIT PN 13222E7263.....	EA	4
68A	8	KFOZZ		96906	MS90725-65	SCREW,CAP,HEXAGON H PART OF KIT PN 13222E7263.....	EA	4
68A	9	KFOZZ		97403	13222E7279	ADAPTER PART OF KIT PN 13222E7263.....	EA	1
68A	10	KFOZZ		96906	MS171596	PIN SPRING PART OF KIT PN 13222E7263.....	EA	2
68A	11	KFOZZ		97403	13222E7269	SHAFT,STEERING PART OF KIT PN 13222E7263.....	EA	1
68A	12	KFOZZ		96906	MS171658	PIN,SPRING PART OF KIT PN 13222E7263.....	EA	2
68A	13	KFOZZ		96906	MS171688	PIN,SPRING PART OF KIT PN 13222E7263.....	EA	2
68A	14	KFOZZ		97403	13222E7265-1	TUBE,STEERING PART OF KIT PN 13222E7263.....	EA	1
68A	15	KFOZZ		97403	13222E7282	JOINT,UNIVERSAL PART OF KIT PN 13222E7263.....	EA	1
68A	16	KFOZZ		96906	MS20066-185	KEY,MACHINE SQUARE PART OF KIT PN 13222E7263.....	EA	1
68A	17	KFOZZ		97403	13222E7271-1	DRIVE,RIGHT ANGLE PART OF KIT PN 13222E7263.....	EA	1
68A	18	KFOZZ		96906	MS171688	PIN,SPRING PART OF KIT PN 13222E8221.....	EA	6
68A	19	KFOZZ		96906	MS171658	PIN SPRING PART OF KIT PN 13222E8221.....	EA	4
68A	20	KFOZZ		97403	13222E7265-1	TUBE,STEERING PART OF KIT PN 13222E8221.....	EA	1
68A	21	KFOZZ		97403	13222E7282	JOINT UNIVERSAL PART OF KIT PN 13222E8221.....	EA	2
68A	22	KFOZZ		97403	13222E7265-2	TUBE STEERING PART OF KIT PN 13225E8221.....	EA	1
68A	23	KFOZZ		96906	MS20066-185	KEY,MACHINE SQUARE PART OF KIT PN 13222E8221.....	EA	2
68A	24	KFOZZ		96906	MS90725-2	SCREW,CAP PART OF KIT PN 13222E8221.....	EA	4
68A	25	KFOZZ		96906	MS35338-44	WASHER,LOCK PART OF KIT PN 13222E8221.....	EA	4
68A	26	KFOZZ		96906	MS27183-10	WASHER,FLAT PART OF KIT PN 13222E8221.....	EA	4

(1) ILLUSTRATION (a) FIG NO	(b) ITEM NO	(2) SMR CODE	(3) NATIONAL STOCK NUMBER	(4) FSCM	(5) PART NUMBER	(6) DESCRIPTION USABLE ON CODE	(7) U/M	(8) QTY INC IN UNIT
68A	27	KFOZZ		87403	13222E7271-2	DRIVE,RIGHT ANGLE PART OF KIT PN 13222E8221.....	EA	1
68A	28	KFOZZ		96906	MS17829-6C	NUT,SELF-LOCKING,HE PART OF KIT PN 13222E8221.....	EA	4
68A	29	KFOZZ		96906	MS27183-14	WASHER,FLAT PART OF KIT PN 13222E8221.....	EA	4
68A	30	KFOZZ		96906	MS90725-62	SCREW,CAP,HEXAGON H PART OF KIT PN 132222E8221.....	EA	4
68A	31	KFOZZ		96906	MS15795-815	WASHER,FLAT PART OF KIT PN 13222E8221.....	EA	2
68A	32	KFOZZ		97403	13222E7278	PLATE,ADAPTER PART OF KIT PN 13225E8221.....	EA	2
68A		PFOZZ	2090-01-098-0214	97403	13222E7263	DRIVE REPLACEMENT,KIT UPPER RIGHT ANGLE DRIVE: USE WHEN GEAR BOX P/N 9004 OR STEERING WHEEL P/N 903 IS REQUIRED.....	EA	1
68A	1					KNOB,SPINNER	EA	1
68A	2					NUT,PLAIN,EXTENDED	EA	1
68A	3					WHEEL,STEERING	EA	1
68A	4					KEY,MACHINE SQUARE	EA	1
68A	5					SCREW,MACHINE	EA	4
68A	6					NUT,SELF-LOCKING,HE	EA	4
68A	7					WASHER,FLAT	EA	4
68A	8					SCREW,CAP,HEXAGON H	EA	4
68A	9					ADAPTER	EA	1
68A	10					PIN SPRING	EA	2
68A	11					SHAFT,STEERING	EA	1
68A	12					PIN,SPRING	EA	2
68A	13					PIN,SPRING	EA	2
68A	14					TUBE,STEERING	EA	1
68A	15					JOINT,UNIVERSAL	EA	1
68A	16					KEY,MACHINE SQUARE	EA	1
68A	17					DRIVE,RIGHT ANGLE	EA	1
68A		PFOZZ		97403	13225E8221	DRIVE REPLACEMENT,KIT LOWER RIGHT ANGLE DRIVE: USE WHEN GEAR BOX P/N 13213E5292 IS REQUIRED.....	EA	1
68A	18					PIN,SPRING	EA	6
68A	19					PIN,SPRING	EA	4
68A	20					TUBE,STEERING	EA	1
68A	21					JOINT UNIVERSAL	EA	2
68A	22					TUBE STEERING	EA	1
68A	23					KEY,MACHINE SQUARE	EA	4
68A	24					SCREW,CAP	EA	4
68A	25					WASHER,LOCK	EA	4
68A	26					WASHER,FLAT	EA	4
68A	27					DRIVE,RIGHT ANGLE	EA	1
68A	28					NUT,SELF-LOCKING,HE	EA	4
68A	29					WASHER,FLAT	EA	4
68A	30					SCREW,CAP,HEXAGON H	EA	4
68A	31					WASHER,FLAT	EA	2
68A	32					PLATE,ADAPTER	EA	1

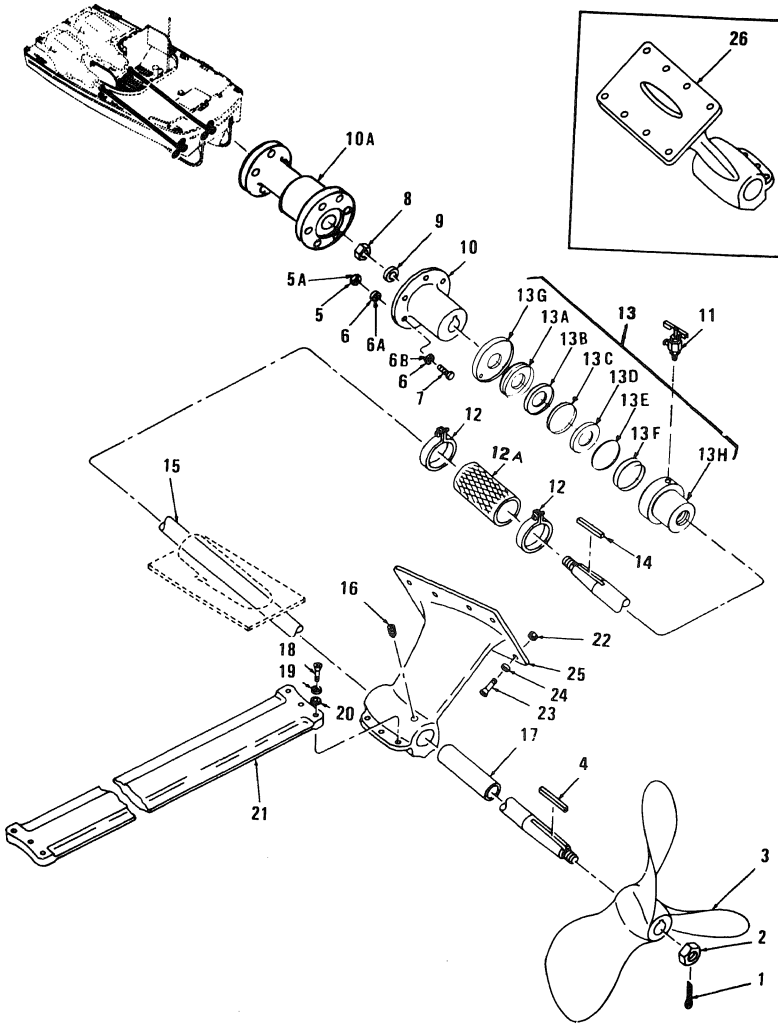

Figure 69. Propeller, Strut and Shaft

(1) ILLUSTRATION		(2) SMR CODE	(3) NATIONAL STOCK NUMBER	(4) FSCM	(5) PART NUMBER	(6) DESCRIPTION USABLE ON CODE	(7) U/M	(8) QTY INC IN UNIT
	(b) ITEM NO							
						GROUP 13 PROPELLER AND PROPELLER SHAFT		
9	5	PAOZZ	5310-01-117-5055	96906	MS17828-7C	NUT,SELF LOCKING HEXAGON,SHAFT COUPLING,7/16-14 THD SIZE.....	EA	16
9	5A	PAOZZ	5310-00-880-8189	96906	MS51967-11	NUT,HEX.....CUA,CUB,CUC	EA	8
9	6	PAOZZ	5310-00-809-4085	96906	MS27183-16	WASHER,FLAT SHAFT COUPLING 0.469 ID X 0.922 OD X 0.065 IN.THK.	EA	6
9	6B	PAOZZ	5310-00-209-0965	96906	MS35338-47	WASHER,LOCK.....CUB,CUC	EA	8
9	7	PAOZZ	5305-00-042-9478	96906	MS90725-90	SCREW,CAP HEXAGON HEAD,SHAFT COUPLING,7/16-14 X 1-3/4 IN.LG...	EA	16
9	11	PAOZZ	4820-00-275-2224	96906	MS35783-1	COCK,DRAIN SEAL.....	EA	2

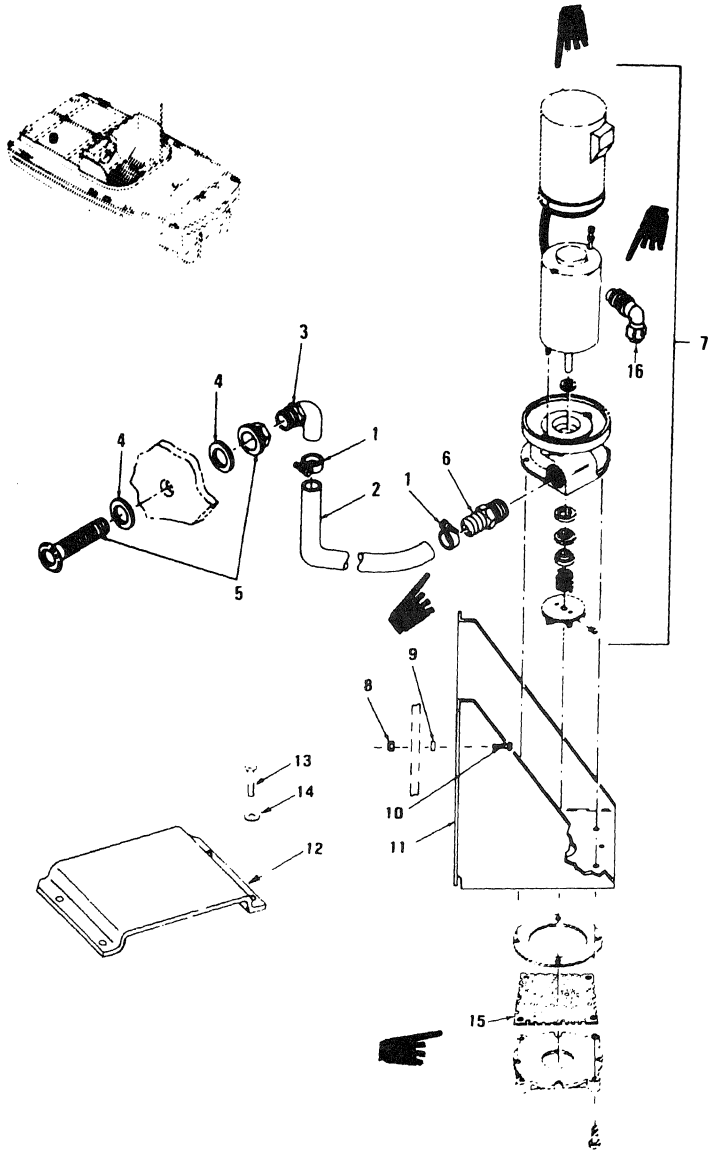

Figure 70. Electric Bilge Pump

SECTION II

(1) ILLUSTRATION (a) FIG NO	(b) ITEM NO.	(2) SMR CODE	(3) NATIONAL STOCK NUMBER	(4) FSCM	(5) PART NUMBER	(6) DESCRIPTION USABLE ON CODE	(7) U/M	(8) QTY INC IN UNIT
						GROUP 14 BILGE PUMP		
70	1	PAOZZ	4730-00-908-3193	96906	MS35842-12	CLAMP, HOSE	EA	2
70	2	MODZZ		97403	13213E5171-307	HOSE, RUBBER MANUFACTURER FROM	EA	1
70	2A	XBOZZ	4720-00-235-4128	81348	ZZH428TY2GRBCL2 1 1-4 IN IN ID	.HOSE, COOLANT 1 1-4IN ID 6FT REQUIRED	PT	6
70	3	PAOZZ		97403	13220E6321-1	TAIL PIECE AND COUPLING NUT.....CCC	EA	1
70	3	XBOZZ		46576	FIG78NO6	TAIL PIECE AND COUPLING NUT.....CUA,CUB,CUC	EA	1
70	4	PAOZZ		97403	13213E5389-3	GASKET.....CCC	EA	2
70	5	PAOZZ		97403	13220E6320-1	CONNECTION THRU HULL.....CUA,CUB,CUC	EA	1
70	5	XBOZZ		46576	FIG322NO5	CONNECTOR, THRU HULL	EA	1
70	6	PAOZZ	4730-01-030-9190	96906	MS24522-32	ADAPTER, STRAIGHT, PI	EA	1
70	7	PAOZZ	4630-00-930-0589	96046	L32-266	PUMPING UNIT, SEWAGE	EA	4
70	8	PAOZZ	5310-00-031-0920	96906	MS17828-4C	NUT, SELF-LOCKING	EA	4
70	9	PAOZZ	5310-00-809-4058	96906	MS27183-10	WASHER, FLAT	EA	4
70	10	PAOZZ	5305-00-068-0501	96906	MS90725-5	SCREW CAP.....CCC	EA	1
70	11	PAOZZ	2040-01-145-4491	97403	13220E6317	BRACKET, MOUNTING BILGE PUMP.....CUA,CUB,CUC	EA	1
70	11	XBOZZ		97403	13219E3598	BRACKET, BILGE PUMP.....CCC	EA	1
70	12	PAOZZ	2040-01-145-4492	97403	13220E6318	SHIELD, BILGE PUMP.....CUA,CUB,CUC	EA	1
70	12	PAOZZ		97403	13219E3597	SHIELD, BILGE PUMP	EA	4
70	13	PAOZZ	5306-00-225-8499	96906	MS90725-34	SCREW, CAP	EA	4
70	14	PAOZZ	5310-00-081-4219	96906	MS27183-12	WASHER, FLAT	EA	1
70	15	PAOZZ	2040-01-145-4493	97403	13220E6319	SCREEN	EA	1
70	16	PAOZZ	5935-00-878-2754	96906	MS3108R12-5S	CONNECTOR, PLUG ELECTRICAL, BILGE PUMP		

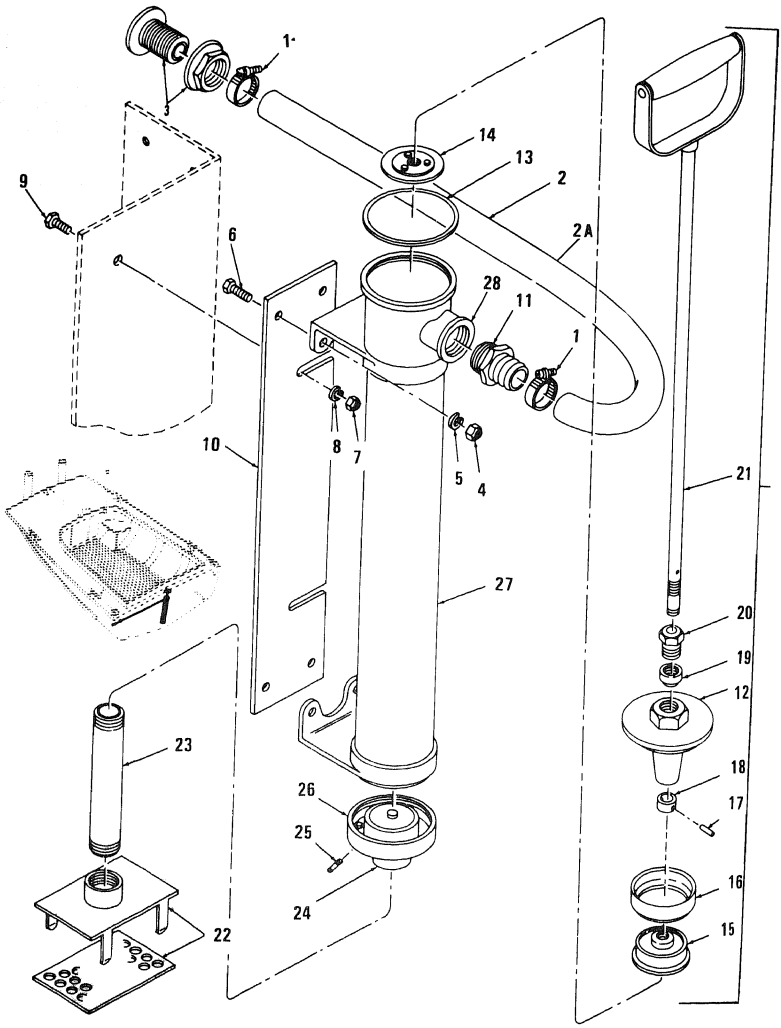

Figure 71. Manual Bilge Pump

(1) ILLUSTRATION FIG NO	(a) ITEM NO.	(2) SMR CODE	(3) NATIONAL STOCK NUMBER	(4) FSCM	(5) PART NUMBER	(6) DESCRIPTION USABLE ON CODE	(7) U/M	(8) QTY INC IN UNIT
11	1	XBOZZ	4730-00-585-8394	81343	SAEJ536ATYPEFSIZ E28	CLAMP, HOSE	EA	2
11	2	MOOZZ		81343	SAE20R11-1-2IN	HOSE,RUBBER MANUFACTURED FROM	EA	1
1	2A	XBOZZ	4720-00-278-4917	24161	14B11ZINID	.HOSE,RUBBER	EA	1
1	3	XBOZZ		76155	Y1365 1 1-2 IN	CONNECTOR THRU HULL	EA	1
	4	SDOZZ	5310-00-761-6882	96906	MS51967-2	NUT,PLAIN,HEXAGON	EA	1
	5	PAOZZ	5310-00-809-4058	96906	MS27183-10	WASHER,FLAT	EA	4
	6	PAOZZ	5305-00-068-0509	96906	MS90728-10	SCREW CAP,HEXAGON	EA	4
	7	PAOZZ	5310-00-732-0559	96906	MS51968-8	NUT PLAIN,HEXAGON	EA	2
	8	PAOZZ	5310-00-959-4675	96906	MS35340-46	WASHER,LOCK-SPRING	EA	4
	9	PAOZZ	5305-00-269-3236	96906	MS90727-60	SCREW CPA,HEX	EA	2
	10	XBOZZ		97403	13216E9923	BRACKET BILGE PUMP	EA	1
	11	XBOZZ		79577	FIG808	NIPPLE,HOSE	EA	1
		XBOZZ	4320-00-480-9437	79577	5392	PUMP,RECIPROCATING	EA	1
	12	XAOZZ		79577	1596	CAP	EA	1
	13	XBOZZ		79577	1646	GASKET,CAP	EA	1
	14	XAOZZ		79577	M1386	WASHER,PLUNGER	EA	1
	15	XAOZZ		79577	1630	VALVE,RING	EA	1
	16	XBOZZ		79577	1649	CUP,LEATHER	EA	1
	17	XAOZZ		79577	1640	PIN,COLLAR,STOP	EA	1
	18	XAOZZ		79577	1641	COLLAR,STOP	EA	1
	19	XDOZZ	5330-00-001-4984	79577	1648	PACKING,PISTON ROD	EA	1
	20	XBOZZ		79577	1597	NUT,PACKING	EA	1
	21	XAOZZ		79577	1637	ROD,PISTON	EA	1
	22	XBOZZ		79577	FIG805	STRAINER BILGE PUMP	EA	1
	23	XBOZZ		81348	WWN351TYPE1LONG	NIPPLE,PIPE	EA	1
	24	XAOZZ		79577	1844	CONNECTION,BOTTOM	EA	1
	25	XAOZZ		79577	1819	PLUG,DRAIN	EA	1
	26	XAOZZ		79577	1845	GUIDE,VALVE	EA	1
	27	XAOZZ		79577	1848	TUBE	EA	1
	28	XAOZZ		79599	1849	BODY	EA	1

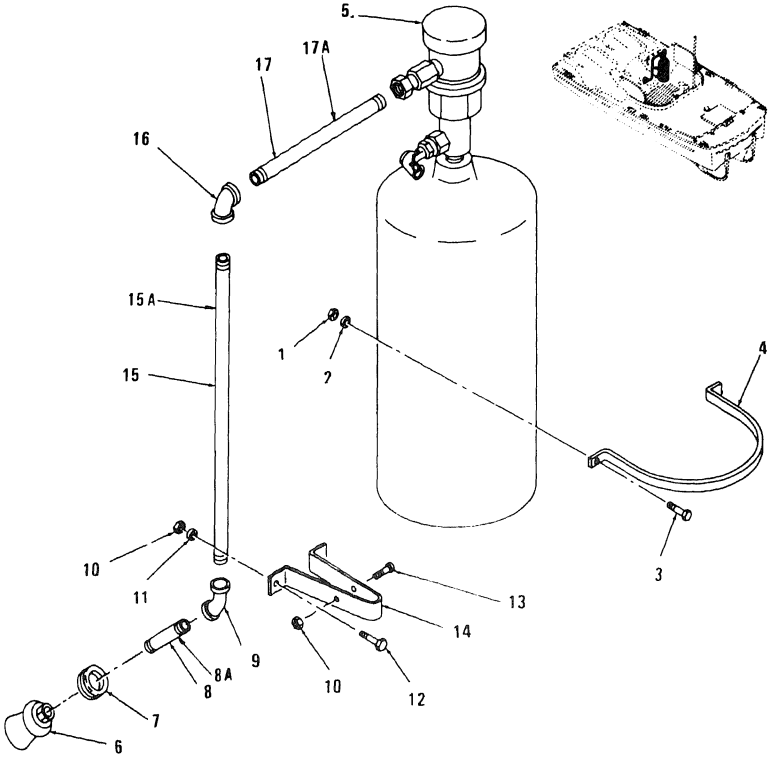

Figure 72. Fire Extinguisher, Lines and Fittings

(1) ILLUSTRATION (a) FIG NO	(b) ITEM NO	(2) SMR CODE	(3) NATIONAL STOCK NUMBER	(4) FSCM	(5) PART NUMBER	(6) DESCRIPTION USABLE ON CODE	(7) U/M	(8) QTY INC IN UNIT
						GROUP 15 FIRE EXTINGUISHER SYSTEM		
72	1	PAOZZ	5310-00-409-3701	96906	MS17828-5C	NUT,SELF-LOCKING HEXAGON CLAMP,5/16-18 IN.THD SIZE.....	EA	4
72	2	PAOZZ	5310-00-081-4219	96906	MS27183-12	WASHER,FLAT CLAMP,0.344 ID X 0.688 OD X 0.065 IN.THK.....	EA	4
72	3	PAOZZ	5306-00-225-8499	96906	MS90725-34	SCREW,CAP HEXAGON,CLAMP,5/16-18 X 1 IN.LG.....	EA	4
72	4	XBOZZ	4210-00-875-6252	97403	13213E5388	CLAMP FIRE EXTINGUISHER.....	EA	2
72	5	PAOZZ	4210-01-014-6390	33525	870483	EXTINGUISHER,FIRE,C.....	EA	1
72	6	XBOZZ		33525	803376	NOZZLE MULTI-JET,FIRE EXTINGUISHER.....	EA	1
72	7	PAOZZ	5325-00-290-1960	96906	MS35489-27	GROMMET,NONMETALLIC 1-1/2 ID X 1-3/4 X 1/16 IN.....	EA	1
72	8	MOOZZ		97403	13219E1111-126	PIPE,STEEL VALVE TO NOZZLE LINE MANUFACTURE FROM.....	EA	1
72	8A	XBOZZ	4710-00-162-1001	47102	027910	.PIPE 7-1/2 IN.REQUIRED.....	FT	V
72	9	PAOZZ	4730-00-249-3917	97403	13219E1111-125	ELBOW,PIPE VALVE TO NOZZLE,45 DEG.....	EA	1
72	10	PAOZZ	5310-00-031-0920	96906	MS17828-4C	NUT,SELF-LOCKING PIPE CLAMP,1/4-20 IN.....	EA	6
72	11	XBOZZ	5310-00-809-4058	92906	MS27183-10	WASHER,FLAT PIPE CLAMP,0.281 ID X 0.625 OD X 0.065 IN.THK.....	EA	6
2	12	PAOZZ	5305-00-068-0501	96906	MS90725-5	SCREW,CAP HEXAGON,PIPE CLAMP,1/4-10 X 5/8 IN.LG.....	EA	4
2	13	PAOZZ	5305-00-071-2238	96906	MS90725-13	SCREW,CAP HEAD,PIPE CLAMP,1/4-20 X 1-3/4 IN.LG.....	EA	2
2	14	XBOZZ		97403	13213E5390	CLAMP,PIPE STEEL PIPE.....	EA	2
2	15	MOOZZ		97403	13219E1111-124	PIPE,STEEL VALVE TO NOZZLE LINE MANUFACTURE FROM.....	EA	1
2	15A	PAOZZ	4710-00-162-1001	81348	WWP406	.PIPE 18 IN.REQUIRED.....	FT	V
2	16	PAOZZ	4730-00-249-3917	97403	13219E111-123	ELBOW PIPE,STEEL,90 DEG.....	EA	1
	17	MOOZZ		97403	13219E1111-122	PIPE,STEEL VALVE TO NOZZLE LINE MANUFACTURE FROM.....	EA	1
	17A	XBOZZ	4710-00-162-1001	81384	WW0406	.PIPE 10-1/2 IN.REQUIRED.....	FT	V

FIGURE 73 NOT APPLICABLE

SECTION IV

NATIONAL STOCK NUMBER AND PART NUMBER INDEX

STOCK NUMBER	FIGURE NO.	ITEM NO.
6210-00-001-1436	19	16
4710-00-001-3379	36	2
4730-00-001-3472	68	25
5340-00-001-4922	63	28
5330-00-001-4982	27	8
5330-00-001-4984	71	19
5340-00-001-4996	48	8
5360-00-001-5003	63	24
5365-00-001-5102	33	17
4730-00-001-6174	26	21
2040-00-007-1136	9	6
6140-00-008-9792	31	10
6140-00-008-9793	31	6
6140-00-008-9794	31	5
6140-00-008-9795	31	5
2040-00-008-9796	7	3
3040-00-009-3376	17	7
3040-00-009-3376	17A	10
5920-00-010-6652	21	3
4730-00-011-9922	26	2
5315-00-013-7258	11	1
5305-00-016-6330	19	1
5310-00-016-7361	28	16
3030-00-017-9733	33	14
4720-00-018-2162	28	7A
5305-00-018-6289	39	10
5305-00-018-7069	38	12
4730-00-019-4727	37	6
4730-00-019-4727	38	10
2940-00-019-8087	45	4
5340-00-019-9512	14	21
5306-00-021-2517	37	11
6625-00-025-9053	19	13
5310-00-031-0919	8	22
5310-00-031-0920	14	9
5310-00-031-0920	28	11
5310-00-031-0920	30	5
5310-00-031-0920	70	8
5310-00-031-0920	72	10
3020-00-031-7596	6	2
5305-00-032-4057	6	
5305-00-032-4080	6	1
4020-00-033-4735	9	4
2040-00-034-4766	70	22
5310-00-038-2307	68	2
5340-00-041-2443	13	8
2815-00-042-6545	48	15
5305-00-042-9478	69	7
5310-00-045-3296	19	7
5310-00-045-5206	1	10
5305-00-050-1077	9	15
5305-00-050-9233	63	31
5305-00-051-0839	27	17A
3040-00-051-5225	18	7
5305-00-052-6921	16	13
5330-00-055-1584	38	14
5330-00-055-1584	39	6
5330-00-055-1587	38	18
5305-00-056-9384	2	11
5920-00-057-2306	21	3
5920-00-057-2306	21	3
6140-00-057-2554	31	11
5310-00-058-3135	18	17
5310-00-058-3608	19	15
5330-00-061-0549	11	7
5310-00-061-1258	33	7
5310-00-061-1258	33	11
5310-00-061-1258	33	16
5310-00-061-1258	33	19
5310-00-061-1258	37	31
5310-00-061-1258	37	34
5340-00-061-2184	48	4
5306-00-064-5356	35	1
5305-00-068-0501	70	10
5305-00-068-0501	72	12
5305-00-068-0502	30	3
5305-00-068-0509	71	6
5305-00-069-5570	33	1
5305-00-069-5572	24	11
5305-00-071-1767	24	12
5305-00-071-1770	9	14
5305-00-071-2238	72	13
2815-00-072-9388	24	9
2815-00-074-1929	48	13
5310-00-080-6004	8	27
5310-00-080-6004	25	3
5310-00-080-6004	31	8
5310-00-080-6004	33	8
5310-00-080-6004	40	18
5310-00-080-6004	45	14
5310-00-080-6004	68	8
5310-00-080-6004	68	40
2910-00-080-7294	25	5
5310-00-080-9785	33	7
5310-00-080-9785	33	16
5310-00-081-4219	6	9
5310-00-081-4219	14	14
5310-00-081-4219	70	14
5310-00-081-4219	72	2
5310-00-082-1404	4	20
5310-00-082-1404	5	24
5935-00-089-0304	4	11
5935-00-089-0304	5	11
5935-00-089-0304	5	20
4730-00-090-0832	19	27
5340-00-097-4258	12	17
3110-00-100-6158	63	30
6685-00-106-9610	19	23
5940-00-110-2816	63	14
2930-00-112-0437	38	21
2815-00-113-7925	40	23
2815-00-113-7926	40	22
5310-00-136-5712	45	6
6620-00-139-3800	19	22
6350-00-141-4847	26	40
5940-00-143-4780	2	3
5306-00-150-1837	46	11
4730-00-152-6070	38	20
4730-00-152-6073	38	19
4730-00-152-6233	36	15
4730-00-152-6233	39	20
6240-00-155-7784	1	5
6240-00-155-7790	4	6
6240-00-155-7795	1	5
6240-00-155-7795	4	6
6240-00-155-7795	5	6
6240-00-155-8714	19	17
5910-00-160-4802	19	5
4710-00-162-1001	72	8A
4710-00-162-1001	72	15A
4710-00-162-1001	72	17A
5340-00-163-4713	8	32
5340-00-163-4713	16	17
5310-00-167-0823	8	15
5310-00-167-0823	26	29
4720-00-174-3004	46	1
4720-00-175-9250	44	2
5325-00-185-0004	4	17
5325-00-185-0004	5	17
4730-00-187-4207	25	12
4730-00-187-4207	39	19
4730-00-187-4207	43	15
4730-00-187-4207	45	11
5315-00-187-9376	17	1
5325-00-189-9860	8	4
6685-00-194-1710	19	28
5310-00-194-9211	68	12
5330-00-198-6176	11	8
5315-00-200-3183	63	22
4730-00-202-8970	37	3
4730-00-202-8970	38	6
4730-00-204-3491	28	2
5310-00-209-0698	28	17
5310-00-209-0965	69	6B
5310-00-209-1239	63	12
5310-00-209-1239	63	27
5330-00-212-6290	44	4
5325-00-212-7857	27	3
2040-00-212-7859	8	29

STOCK NUMBER	FIGURE NO.	ITEM NO.
3040-00-212-7928	10	4
2910-00-214-279	26	20
2990-00-221-5857	27	20
5330-00-222-0569	27	21
5305-00-225-3839	28	12
5310-00-225-5328	31	2
5306-00-225-8498	33	3
5306-00-225-8499	11	5
5306-00-225-8499	14	15
5306-00-225-8499	70	13
5306-00-255-8499	72	3
5306-00-225-8500	37	18
5306-00-225-8500	46	10
5306-00-225-9087	18	15
5306-00-226-4624	38	1
5306-00-226-4626	36	4
5306-00-226-4626	37	7
5306-00-226-4626	37	23
5306-00-226-4628	38	8
3040-00-229-2635	18	5
3040-00-229-2637	40	6
3040-00-299-2640	17	7
3040-00-229-2640	17A	10
2920-00-229-2668	35	4
2815-00-229-3309	40	27
4730-00-230-2971	46	4A
6680-00-231-0786	61	20
5310-00-233-7728	11	4
3040-00-233-8912	18	6
3040-00-233-8913	18	5
3040-00-233-8914	40	5
3040-00-233-8914	40	6
3040-00-233-8915	18	6
2990-00-234-0460	27	10
2990-00-234-0461	27	19
2990-00-234-0470	27	12
4720-00-235-4126	70	2A
5310-00-241-6606	27	17C
5315-00-241-7332	7	1
2920-00-241-7625	30	1
2920-00-241-7631	30	2
5305-00-244-3878	33	6
5310-00-245-3504	8	14
5320-00-245-4360	14	21A
2930-00-246-5305	36	7
4730-00-249-3917	72	9
4730-00-249-3917	72	16
4730-00-251-0772	70	1
5310-00-252-8748	18	16
4730-00-254-6215	46	4
4010-00-262-1551	12	16A
4010-00-262-1551	14	20A
5365-00-262-4701	45	9
5305-00-269-2819	48	12
5305-00-269-3209	33	6
5305-00-269-3209	48	5
5305-00-269-3209	48	9
5305-00-269-3210	43	1
5305-00-269-3211	25	1
5305-00-269-3211	31	9
5305-00-269-3211	33	10
5305-00-269-3211	43	17
5305-00-269-3211	68	37
5305-00-269-3213	68	41
5305-00-269-3215	68	9
5305-00-269-3216	5	30
5305-00-269-3236	40	14
4210-00-270-4512	71	9
4820-00-275-2224	8	2
4220-00-275-3156	69	11
4730-00-277-4377	9	8
4730-00-277-8273	46	5
4730-00-277-8274	36	3
4730-00-277-8274	26	5
4730-00-277-9615	26	10
4720-00-278-4917	26	6
4720-00-278-5050	71	2A
4720-00-278-5050	37	4
5920-00-280-8342	38	7
	21	3

STOCK NUMBER	FIGURE NO.	ITEM NO.
5325-00-282-7471	21	10
5340-00-282-7532	37	13
5920-00-284-6787	21	3
5975-00-284-9041	1	15
5975-00-284-9041	4	10
5975-00-284-9041	5	10
4730-00-287-1784	19	24
2910-00-287-5474	25	4A
4730-00-288-8496	67	5
4730-00-288-8497	67	4
5325-00-290-1960	31	14
5325-00-290-1960	72	7
5330-00-292-3482	37	22
6240-00-295-2421	2	9
5315-00-298-1481	12	1
6220-00-299-6124	1	3
6220-00-299-6125	1	3
3040-00-304-3068	12	4
6220-00-307-8820	1	1A
5305-00-340-6364	2	6
2030-00-344-8460	68	44
5310-00-353-4828	10	5
2040-00-353-4925	7	11
2020-00-353-4928	7	10
5305-00-354-1227	40	12
6680-00-364-3506	24	7
2090-00-368-8194	9	2
2040-00-374-2723	15	6
2040-00-274-2724	13	13
2040-00-374-2749	12	14
6220-00-389-6215	1	1A
2920-00-391-2989	33	22
5310-00-400-5503	18	8
5310-00-400-5503	18	12
5306-00-405-1254	31	3
5310-00-407-9566	24	6
5310-00-407-9566	33	4
5310-00-407-9566	36	5
5310-00-407-9566	37	12
5310-00-407-9566	37	19
5310-00-407-9566	37	24
5310-00-407-9566	38	2
5310-00-407-9566	38	9
5310-00-407-9566	46	12
5310-00-409-3701	6	8
5310-00-409-3701	14	13
5310-00-409-3701	72	1
2910-00-410-7514	26	20
4720-00-413-3406	46	2
5305-00-418-2843	39	15
4730-00-424-4019	61	21
4720-00-432-1266	37	1
4720-00-432-1267	26	4
2990-00-432-1326	27	16
2040-00-450-1550	7	8
2030-00-453-8974	68	3
5365-00-461-4813	33	9
5935-00-462-6603	2	5
2930-00-462-8114	37	27
5330-00-469-8234	37	26
4820-00-477-9779	25	8
4820-00-477-9779	43	6
5305-00-477-9779	43	6
5305-00-478-0273	5	18
4320-00-480-9437	71	
5310-00-483-8791	63	8
5310-00-483-8792	13	4
2040-00-484-5725	7	9
5325-00-489-1262	21	1A
2040-00-498-6237	8	40
2040-00-498-6238	6	4
2040-00-498-6239	8	44
5340-00-499-3597	46	3
4720-00-517-7917	28	8A
5310-00-531-9515	40	11A
4730-00-540-2612	36	1
5305-00-543-2419	33	18
5305-00-543-2419	37	30
5305-00-543-2419	37	33
5305-00-543-2419	45	12
5365-00-543-3615	43	9
5306-00-543-4405	27	7
5310-00-551-0433	43	4

STOCK NUMBER	FIGURE NO.	ITEM NO.
2040-00-575-4787	8	31
5310-00-576-5752	17	3
5930-00-577-2523	20	6
5920-00-581-6126	21	3
5310-00-582-5965	26	17
5310-00-584-5272	9	12
5310-00-584-5272	24	13
4730-00-585-8394	28	1
4730-00-585-8394	71	1
2930-00-590-9041	37	21
5310-00-595-6852	24	14
5310-00-595-8121	39	8
5315-00-597-3693	13	2
5315-00-597-3693	14	2
5315-00-597-5387	24	4
5306-00-604-7961	43	3A
5330-00-604-8094	45	8
4730-00-608-1777	38	22
5330-00-612-3123	43	11
5340-00-612-3134	43	10
5306-00-613-9396	44	1
5330-00-613-9397	37	10
5330-00-613-9397	37	15
5330-00-613-9397	38	11
5315-00-616-5522	12	5
5315-00-616-5527	12	11
5315-00-616-5529	68	15
5315-00-616-5529	68	31
5360-00-619-8198	43	13
2090-00-620-5524	9	9
2090-00-620-5525	8	8
5330-00-620-7359	24	17
5310-00-625-5756	27	17B
5330-00-629-6340	45	7
5930-00-636-2821	20	3
5310-00-637-9541	25	2
5310-00-637-9541	38	13
5310-00-637-9541	38	16
5310-00-637-9541	39	4
5310-00-637-9541	39	11
5310-00-637-9541	39	16
5310-00-637-9541	40	2
5310-00-637-9541	40	13
5310-00-637-9541	40	26
5310-00-637-9541	43	2
5310-00-637-9541	43	18
5310-00-637-9541	45	13
5310-00-637-9541	48	6
5310-00-637-9541	68	36
5306-00-637-9623	40	1
5306-00-637-9674	27	17
4730-00-640-1051	37	17
2920-00-640-7518	29	1
5930-00-655-1514	19	21
5930-00-655-1516	20	2
5930-00-655-1518	20	5
5930-00-655-1520	20	4
5310-00-655-5893	43	12
5930-00-669-7872	45	21
5340-00-682-2174	28	15
5330-00-682-7193	40	19
5305-00-688-2111	33	15
3010-00-695-7827	24	3
5307-00-697-1264	24	16
5310-00-701-5786	8	26
5310-00-701-5786	13	1
5310-00-701-5786	15	1
5310-00-701-5786	31	7
5310-00-701-5786	68	7
5310-00-701-5786	68	39
5365-00-708-7865	25	11
5365-00-708-7865	39	18
5365-00-708-7865	43	14
5360-00-712-5747	40	29
2815-00-712-5749	40	30
5305-00-724-5834	12	8
5305-00-724-5884	66	1
5305-00-724-5903	63	20
5305-00-727-8834	1	1B
5305-00-728-6286	68	29
5305-00-728-6292	68	14
5310-00-732-0558	48	7
5310-00-732-0558	68	35
5310-00-732-0559	71	7
3030-00-740-3650	33	14
4820-00-741-0385	26	19
5360-00-745-7791	40	24
5310-00-761-6882	71	4
5310-00-763-8920	9	20
5305-00-764-0075	1	11
5307-00-765-4215	45	1
2910-00-765-5331	40	21
5310-00-767-0445	27	5
5310-00-768-0318	9	11
5305-00-770-2579	4	7
5305-00-770-2579	5	7
5305-00-770-2579	5	9
1450-00-775-1359	40	16
1450-00-775-1359	40	17
4320-00-775-3793	8	3
2030-00-780-0689	68	16
5305-00-782-9495	26	27
5640-00-786-2229	27	4
2815-00-788-6639	40	20
4330-00-792-7343	43	3
2910-00-792-8985	25	9
5330-00-792-9026	48	14
6620-00-792-9032	38	5
5360-00-801-8731	45	10
5310-00-801-3079	33	8
5310-00-809-4058	13	5
5310-00-809-4058	14	10
5310-00-809-4058	28	13
5310-00-809-4058	30	4
5310-00-809-4058	70	9
5310-00-809-4058	71	5
5310-00-809-4058	72	11
5310-00-809-4058	69	6
5310-00-809-4085	33	2
5310-00-809-5997	9	13
5310-00-809-5998	12	3
5310-00-809-8533	8	19
5310-00-809-8540	7	2
5310-00-809-8541	19	3
5310-00-809-8544	19	20
5310-00-809-8544	4	24
5310-00-809-8546	14	19
5310-00-809-8546	19	11
5310-00-809-8546	22	2
5310-00-809-8546	26	24
5310-00-809-8546	63	3
5310-00-809-8546	19	2
5310-00-811-3494	19	19
5310-00-811-3494	14	4
5315-00-816-1794	28	10
4730-00-818-3866	28	10A
4730-00-818-3866	28	9
4730-00-818-5194	35	2
5310-00-820-6653	8	23
5310-00-823-8803	9	18
5310-00-823-8803	19	9
6680-00-825-2076	5	28
5340-00-827-2453	28	4A
4720-00-828-4153	13	3
5306-00-834-8533	14	3
5306-00-834-8533	15	4
5306-00-834-8533	1	13
5330-00-835-1885	1	4
5330-00-835-1886	4	5
5330-00-835-1886	5	5
5330-00-835-1886	10	8
5306-00-835-1918	8	30
5315-00-835-1948	10	1
5305-00-835-1957	63	4
2990-00-836-8338	46	7
4730-00-837-0816	4	
6220-00-837-2176	4	4
6220-00-838-0182	5	4
6220-00-838-0182	21	1B
5365-00-838-0422	4	1
6220-00-838-5977		

STOCK NUMBER	FIGURE NO.	ITEM NO.
2910-00-838-9604	26	20
5330-00-839-1749	12	7
5315-00-838-5822	8	11
6220-00-839-7439	5	1B
6210-00-842-0168	19	18
6220-00-842-0259	1	1
6220-00-842-0260	1	1
5315-00-844-0342	15	2
4820-00-845-1096	37	28
4820-00-845-1096	39	14
4720-00-847-1710	19	25
4820-00-849-1220	47	9
5305-00-855-0957	5	27
5930-00-855-3938	26	1
5945-00-863-3418	30	7
4210-00-875-6252	72	4
4210-00-875-6252	72	4
5310-00-877-5797	4	23
5310-00-877-5797	22	1
5310-00-877-5797	63	2
5310-00-880-7744	25	4
5310-00-880-7745	39	7
5310-00-880-8189	69	5A
6680-00-882-0965	24	1
6680-00-882-0966	24	2
2920-00-883-1223	33	13
6145-00-889-0645	2	4
5310-00-889-2606	5	29
5310-00-889-2606	13	12
5310-00-889-2606	14	1
5310-00-889-2606	15	5
5310-00-889-2606	31	1
2040-00-889-5345	6	6
2040-00-889-5345	8	39
2040-00-889-5345	8	43
2910-00-890-2436	43	7
5310-00-891-3425	66	8
5920-00-892-9311	21	2
5310-00-897-6080	19	14
9320-00-900-6746	13	14A
9320-00-900-6746	14	7A
9320-00-900-6746	15	7A
4720-00-902-1549	48	1
4730-00-902-1949	37	8
5315-00-903-5931	14	5
2815-00-905-7917	45	18
2990-00-905-8122	27	16
5310-00-905-8451	4	19
5310-00-905-8451	5	23
4730-00-908-3193	28	1
4730-00-908-3195	26	31
4730-00-909-8627	28	7B
5310-00-913-8881	27	12D
5325-00-916-2145	70	15
5340-00-919-2876	37	29
4730-00-921-5387	39	1
4730-00-921-5387	46	8
2815-00-922-2009	26	3
4730-00-922-2015	48	2
5310-00-925-9642	9	25
5330-00-926-9378	70	4
4630-00-930-0589	70	7
5360-00-930-3264	45	19
5305-00-930-3427	45	17
2920-00-932-4847	33	20
2030-00-933-1630	18	4
2030-00-933-1630	40	10
5310-00-933-8120	18	3
5310-00-933-8120	40	9
5310-00-933-8121	18	9
5310-00-933-8121	18	13
4730-00-934-8026	26	9
5310-00-934-9751	17	2
5310-00-934-9751	19	6
5310-00-934-9765	18	2
5310-00-934-9765	26	23
5310-00-934-9765	40	8
5310-00-941-9452	1	9
5310-00-942-5183	8	21
2940-00-944-6249	45	20
5305-00-954-3937	68	5
5310-00-956-3150	8	18
5310-00-956-3150	10	6
5305-00-957-7282	20	1
5305-00-958-5450	4	21
5305-00-958-5450	5	25
5305-00-958-5477	19	4
5305-00-958-8461	10	7
5305-00-959-2722	6	11
5310-00-959-4675	71	8
5305-00-964-0589	8	16
5305-00-964-0635	27	12B
5310-00-974-6623	27	6
5310-00-984-3806	27	
5305-00-984-5691	8	28
5305-00-984-6193	12	15
5305-00-984-6207	63	4A
5305-00-984-6207	63	15
5305-00-984-6207	63	15
5305-00-984-6208	63	11
5305-00-984-6208	63	26
5310-00-984-7042	27	12C
5305-00-984-7341	26	22
5305-00-984-7341	40	7
5305-00-984-7342	63	1
5305-00-988-1725	68	11
5305-00-988-1725	68	42
5305-00-988-1726	13	6
5305-00-988-1726	26	15
2040-00-989-3267	12	13
2040-00-989-3268	8	34
2020-00-989-3271	8	7
5305-00-989-7435	4	25
5305-00-989-7435	14	18
5305-00-989-7435	17	4
5305-00-989-7435	40	7A
2030-00-990-2186	66	3
2030-00-990-2197	66	9
2030-00-990-2200	66	7
5305-00-993-1851	22	3
5305-00-993-2459	63	6
5305-00-993-2736	18	11
5305-00-998-1888	26	18
5305-00-997-6033	9	10
2020-00-997-6034	8	10
2020-00-997-6035	8	9
2020-00-997-6036	8	9
2020-00-997-6037	8	6
2020-00-997-6038	8	5
2030-00-997-6041	9	3
2040-00-997-6045	6	12
2040-00-997-6046	10	2
2040-00-997-6047	9	5
2040-00-997-6046	10	2
2090-00-997-6049	9	1
2090-00-997-6050	8	1
2040-00-997-9764	12	10
5310-00-998-0608	12	2
3020-00-998-7298	34	3
2040-01-003-2372	5	19
4210-01-014-6390	72	5
5330-01-026-6331	27	21
5330-01-027-8966	27	8A
6140-01-027-9035	31	5
5640-01-030-1631	27	2
2990-01-030-8827	27	10
4730-01-030-9190	70	6
2990-01-030-9239	27	11
2990-01-031-1903	27	20
4010-01-039-3856	27	1
6135-01-081-9725	31	4
2040-01-090-3306	2	10
2040-01-090-3307	2	1
5365-01-091-4044	12	9
4730-01-097-4906	27	9
2090-01-098-0214	68A	
2020-01-098-4672	4	18
6220-01-098-7503	5	1
6220-01-10-0621	5	1
2010-01-105-2060	17A	
6220-01-105-6432	4	
5310-01-117-5055	69	5

FSCM	PART NUMBER	FIGURE NO.	ITEM NO.
78225	AA13253	48	15
41625	AC37693	40	5
88044	AN6227-20	11	8
88044	AN912-1	26	2
88044	AN960-816	8	15
88044	AN960-816	26	29
88044	AN960C416	40	11A
41625	A21600	17A	12
41625	A21600	18	14
41625	A300646	17A	5
41625	A300965	17A	4
41625	A301474	17A	
41625	A31126	18	7
41625	A31509	17A	9
41625	A31509	17	5
41625	A31509	18	4
41625	A31509	40	10
41625	A31538	17	6
41625	A31539	17	8
41625	A31980	63	18
41625	A32010	63	5
41625	A32010	63	16
41625	A32011	63	10
41625	A32770	63	23
41625	A32784	63	14
41625	A32785	63	28
41625	A32788	63	25
41625	A32790	63	24
41625	A32792	63	29
96906	A32962	63	13
41625	A32963	63	9
41625	A35232-1	63	19
41625	A38635	18	10
41625	A48676	63	7
41625	A50112-569	17A	6
41625	A50146-561	17A	11
41625	A50803-059	17A	7
41625	A50803-077	17A	3
41625	A50900-076	17A	8
41625	A50901-016	17A	2
41625	A51304-135	63	17
41625	A61313	18	19
41625	B301477	17A	13
41625	B41331	18	18
81349	CA33KFB504	19	5
81349	CO-02MOP2016-0335	2	4
81349	CO-02MOP2-16-0335	4	16A
81349	CO-02MOP2-16-0335	5	16A
81349	CO-02MOP2-16-033:	5	21A
96906	C1028PC11	38	15
41625	D32778	63	21
41625	D33590	17	9
41625	E32777-2	63	32
79577	FIG149	4	22
79577	FIG149	5	26
79577	FIG151	4	11
79577	FIG151	5	11
79577	FIG151	5	20
79577	FIG1510-3-4IN	70	3
46576	FIG322N05	70	5
75977	FIG3893	5	1B
79577	FIG3894	4	1
46576	FIG78N06	70	3
79577	FIG805	71	22
79577	FIG808	71	11
79577	FIG857	70	5
81349	FO2A250VIA	21	3
81349	FO2A250V3A	21	3
81349	FO2A250V5A	21	3
81349	FO2B32V15A	21	3
81349	FO2B32V20A	21	3
81349	FO2B32V20A	21	3
45676	FIG5-A C-2 GALV	5	1
46576	FIG91-R C2	1	1A
19728	GHT6002TS	33	22
96046	L32-266	70	7
13445	M-424	4	12
18265	MFM06-0005	27	16
81349	MILA18001	28	15
81349	MILC1213ATYPED	67	4
81349	MILF19207TYPEFHN26G	21	2
81349	MILF5591STYLE2TYPE2SIZE5	21	1
81349	MILF5591TYPE2STYLESIZE5	8	4
81349	MILT16411	27	4
81349	MILR6130TYPE1	13	14A
81349	MILR6130TYPE1	14	7A
81349	MILR6130TYPE1	15	7A
81349	MILT16411TYPE2 1-2THK	27	2
81349	MILT55164-3TYPE39TB16	22	4
81348	MML751GRN01	26	39
96906	MS15584-15	1	5
96906	MS15584-15	4	6
96906	MS15584-15	5	6
96906	MS15584-16	4	6
24617	MS15795-14	33	11
96906	MS15795-812	27	1[illegible]
96906	MS15795-815	68A	11
96906	MS15795-841	31	[illegible]
96906	MS15795-907	1	1[illegible]
96906	MS16228-1	7	6
96906	MS16562-250	15	4
96906	MS171536	10	1
96906	MS171596	68A	10
96906	MS171598	63	22
96906	MS171648	13	2
96906	MS171648	14	2
96906	MS171658	68A	12
96906	MS171658	68A	19
96906	MS171688	66	2
96906	MS171688	68A	13
96906	MS171688	68A	18
96906	MS171688	68	26
96906	MS171688	68	30
96906	MS172828-10C	9	17
96906	MS17828-10F	8	22
96906	MS17828-14F	8	18
96906	MS17828-14F	10	6
96906	MS17828-4C	14	9
96906	MS17828-4C	28	11
96906	MS17828-4C	30	5
96906	MS17828-4C	70	8
96906	MS17828-4C	72	10
96906	MS17828-5C	6	8
96906	MS17828-5C	14	13
96906	MS17828-5C	72	1
96906	MS17828-5C	8	26
96906	MS17828-6C	13	1
96906	MS17828-6C	15	1
96906	MS17828-6C	68	7
96906	MS17828-6C	68	39
97403	MS17828-6C	31	7
96906	MS17828-7C	69	5
96906	MS17828-8C	8	14
96906	MS17829-4F	63	8
96906	MS17829-6C	68A	6
96906	MS17829-6C	68A	28
96906	MS17830-5C	27	17C
96906	MS17988-516	12	17
96906	MS17988C620	14	21
96906	MS18006-4572	2	9
96906	MS19059-57	63	30
96906	MS20066-1B5	68A	16
96906	MS20066-1B5	68A	23
96906	MS20066-254	68A	4
96906	MS20144N3	19	10
96906	MS20392-5C63	14	5
96906	MS20470B6-14	14	21A
96906	MS21044N08	19	2
96906	MS21044N08	19	19
96906	MS21044N3	4	23
96906	MS21044N3	22	1
96906	MS21044N3	63	2
96906	MS21083N08	1	9
96906	MS21083N06	4	19
96906	MS21083N06	5	23
96906	MS21083N10	8	25
96906	MS21083N14	8	21
96906	MS21083N18	28	16
96906	MS21316-22	2	6
96906	MS21316-33	2	11

NATIONAL STOCK NUMBER AND PART NUMBER INDEX

FSCM	PART NUMBER	FIGURE NO.	ITEM NO.
96906	MS21333-56	37	13
96906	MS24129-2-8C	26	28
96906	MS24522-32	70	6
96906	MS24527-46	19	1
96906	MS24629-46	5	27
96906	MS24629-57	16	13
96906	MS24665-285	14	4
96906	MS24665-315	17	1
96906	MS24665-353	8	11
96906	MS24665-357	12	1
96906	MS24665-374	7	1
96906	MS24665-497	11	1
96906	MS25036-108	2	3
96906	MS25036-6	5	22
96906	MS25068-24	20	6
96906	MS25231-313	19	17
96906	MS27142-2	2	5
92906	MS27183-10	72	11
96906	MS27183-10	13	5
96906	MS27183-10	14	10
96906	MS27183-10	28	13
96906	MS27183-10	30	4
96906	MS27183-10	68A	26
96906	MS27183-10	70	9
96906	MS27183-10	71	5
96906	MS27183-12	6	9
96906	MS27183-12	14	14
96906	MS27183-12	70	14
96906	MS27183-12	72	2
96906	MS27183-14	8	27
96906	MS27183-14	25	3
96906	MS27183-14	31	8
96906	MS27183-14	33	8
96906	MS27183-14	45	14
96906	MS27183-14	68A	7
96906	MS27183-14	68A	29
96906	MS27183-14	68	8
96906	MS27183-14	68	40
96906	MS27183-16	69	6
96906	MS27183-17	33	2
96906	MS27183-18	9	13
96906	MS27183-19	33	8
96906	MS27183-21	8	23
96906	MS27183-21	9	18
96906	MS27183-23	12	3
96906	MS27183-25	8	19
96906	MS27183-27	7	2
96906	MS27183-29	28	17
96906	MS27183-6	4	20
96906	MS27183-6	5	24
96906	MS27183-7	19	3
96906	MS27183-7	19	20
96906	MS27183-8	4	24
96906	MS27183-8	14	19
96906	MS27183-8	19	11
96906	MS27183-8	22	2
96906	MS27183-8	26	24
96906	MS27183-8	63	3
96906	MS35000-3	31	11
96906	MS35058-22	19	21
96906	MS35058-24	20	2
96906	MS35058-27	20	5
96906	MS35058-28	20	4
96906	MS35059-24	20	3
96906	MS35150-5	5	28
96906	MS35190-209	20	1
96906	MS35190-240	4	21
96906	MS35190-240	5	25
96906	MS35190-254	19	4
96906	MS35190-290	68A	5
96906	MS35190-290	68	5
96906	MS35190-308	6	11
96906	MS35191-213	18	1
96906	MS35191-273	26	22
96906	MS35191-273	40	7
96906	MS35191-274	63	1
96906	MS35206	63	4A
96906	MS35206-245	12	15
96906	MS35206-261	63	11
96906	MS35206-261	63	26

FSCM	PART NUMBER	FIGURE NO.	ITEM NO.
96906	MS35206-281	68	11
96906	MS35206-281	68	42
96906	MS35206-282	13	6
96906	MS35206-287	26	15
96906	MS35206-311	8	28
96906	MS35206260	63	15
96906	MS35207-264	4	25
96906	MS35207-264	14	18
96906	MS35207-264	17	4
96906	MS35207-264	40	7A
96906	MS35207-267	22	3
96906	MS35207-280	18	11
96906	MS35207-283	63	6
96906	MS35307-334	27	7
96906	MS35307-336	27	17
96906	MS35307-355	5	18
96906	MS35307-369	27	12B
96906	MS35333-39	17	3
96906	MS35335-60	63	12
96906	MS35335-60	63	27
96906	MS35335-64	19	15
96906	MS35336-27	68	12
96906	MS35336-35	18	17
96906	MS35338-138	18	3
96906	MS35338-138	4	9
96906	MS35338-139	18	9
96906	MS35338-139	18	13
96906	MS35338-140	27	6
96906	MS35338-141	27	120
96906	MS35338-44	26	17
96906	MS35338-44	68A	25
96906	MS35338-45	24	6
96906	MS35338-45	33	4
96906	MS35338-45	36	5
96906	MS35338-45	37	12
96906	MS35338-45	37	19
96906	MS35338-45	37	24
96906	MS35338-45	38	2
96906	MS35338-45	38	9
96906	MS35338-45	46	12
96906	MS35338-46	25	2
96906	MS35338-46	38	13
96906	MS35338-46	38	16
96906	MS35338-46	39	4
96906	MS35338-46	39	11
96906	MS35338-46	39	16
96906	MS35338-46	40	2
96906	MS35338-46	40	13
96906	MS35338-46	40	26
96906	MS35338-46	43	2
96906	MS35338-46	43	18
96906	MS35338-46	45	13
96906	MS35338-46	48	6
96906	MS35338-46	68	36
96906	MS35338-47	69	6B
96906	MS35338-48	9	12
96906	MS35338-48	24	13
96906	MS35338-50	35	2
96906	MS35340-46	71	8
96906	MS35425-42	5	29
96906	MS35425-42	13	12
96906	MS35425-42	14	1
96906	MS35425-42	15	5
96906	MS35425-42	31	1
96906	MS35478-307	1	5
96906	MS35489-27	31	14
96906	MS35489-27	72	7
96906	MS35489-40	4	17
96906	MS35489-40	5	17
96906	MS35489-84	70	15
96906	MS35494-615	26	38
96906	MS35649-2252	26	18
96906	MS35650-302	17	2
96906	MS35650-302	19	6
96906	MS35650-304	18	2
96906	MS35650-304	26	23
96906	MS35650-304	40	8
96906	MS35650-3254	18	8
96906	MS35650-3254	18	12
96906	MS35650-3314	18	16

FSCM	PART NUMBER	FIGURE NO.	ITEM NO.
96906	MS35691-27	19	14
96906	MS35691-65	66	8
96906	MS35692-61	12	2
96906	MS35756-12	12	5
96906	MS35756-16	68	31
96906	MS357.6-18	12	11
96906	MS357676	68	15
96906	MS35782-5	47	9
96906	MS35783-1	69	11
96906	MS35842-10	26	31
96906	MS35842-12	28	1
96906	MS35842-13	28	7B
96906	MS35916-2	19	9
96906	MS39159-3	19	27
96906	MS39162-7	46	4
96906	MS45904-80	33	7
96906	MS45904-80	33	16
96906	MS51065-34-2	33	14
96906	MS51071-4	24	2
96906	MS51071-7	24	1
96906	MS51922-9	27	
96906	MS51952-3	26	35
96906	MS51957-67	63	31
96906	MS51957-98	27	17A
96906	MS51959-15	4	7
96906	MS51959-15	5	7
96906	MS51959-48	1	1B
96906	MS51959-49	1	11
96906	MS51963-103	66	1
96906	MS51963-85	63	20
96906	MS51963-87	12	8
96906	MS51967-11	69	5A
96906	MS51967-14	9	11
96906	MS51967-2	71	4
96906	MS51967-20	9	20
96906	MS51967-5	25	4
96906	MS51967-8	48	7
96906	MS51967-8	68	35
96906	MS51968-11	39	7
96906	MS51968-8	71	7
96906	MS51971-2	27	5
96906	MS51971-3	27	12D
96906	MS51973-64	68	29
96906	MS51973-75	68	14
96906	MS527183-14	40	18
96906	MS87006-63	7	4
96906	MS90725-110	24	12
96906	MS90725-111	26	[illegible]
96906	MS90725-115	8	
96906	MS90725-116	9	14
96906	MS90725-118	9	15
96906	MS90725-13	72	13
96906	MS90725-2	68A	24
96906	MS90725-33	33	3
96906	MS90725-34	11	5
96906	MS90725-34	14	15
96906	MS90725-34	70	13
96906	MS90725-34	72	3
96906	MS90725-35	46	10
96906	MS90725-5	70	10
96906	MS90725-5	72	12
96906	MS90725-58	33	6
96906	MS90725-58	48	5
96906	MS90725-58	48	9
96906	MS90725-59	43	1
96906	MS90725-6	30	3
97403	MS90725-6	14	11
96906	MS90725-60	25	1
96906	MS90725-60	31	9
96906	MS90725-60	33	10
96906	MS90725-60	43	17
96906	MS90725-60	68	37
96906	MS90725-62	68A	30
96906	MS90725-62	68	41
96906	MS90725-65	68A	8
96906	MS90725-65	68	9
96906	MS90725-66	5	30
96906	MS90725-66	40	14
96906	MS90725-8	28	12
96906	MS90725-82	33	1

FSCM	PART NUMBER	FIGURE NO.	ITEM NO.
96906	MS90725-90	69	7
96906	MS90726-215	10	7
96906	MS90726-32	18	15
96906	MS90726-75	48	12
96906	MS90727-60	71	9
96906	MS90728-10	71	6
96906	MS90728-31	38	1
96906	MS90728-33	36	4
96906	MS90728-33	37	7
96906	MS90728-33	37	23
96906	MS90728-35	38	8
96906	MS90728-61	33	18
96906	MS90728-61	37	30
96906	MS90728-61	37	33
96906	MS90728-61	45	12
96906	MS90825-35	37	18
79577	M1386	71	14
96906	M24129-2-4C	13	4
79577	M3555-1-1-2	9	16
74400	M4012	26	1
13445	M423	5	12
71366	P62-9	6	7
81348	QQS763CLS316CNDA	68	34
79645	R-1538	2	2
81349	RRC271TYPEII	14	20
81349	RRC271TYPE2	12	16
81343	SAEJ20R1	28	3
81343	SAEJ20R1	28	4
81343	SAEJ20R1	28	5
81343	SAEJ20R1	28	6
81343	SAEJ20R1	28	7
81343	SAEJ20R1	28	8
81343	SAEJ513BFIG251-4X5-8	26	9
81343	SAEJ513BFIG251-4X5-8	26	13
81343	SAEJ513BFIG273-8X5-8	26	14
81343	SAEJ536ATYPEFSIZE28	28	1
81343	SAEJ536ATYPEFSIZE28	71	1
81343	SAEJ536ATYPEFSIZE32	28	2
81343	SAEJ20R11-1-2IN	71	2
81348	SAE30R1 1-2IN ID	26	30
18265	SAM00-0127	40	4
81348	WWN351TYPE1LONG	71	23
81348	WWP406	72	15A
81384	WWO406	72	17A
41947	W2055	28	9
41947	W2064	28	10
76155	Y1365 1 1-2 IN	71	3
31[illegible]	[illegible]	48	13
72582	103647	25	8
72582	103647	43	6
72582	106337		
24617	108608	38	12
72447	1100SERIES6857-2SFMODIFIED	68	32
72447	1100SER6857-2SFMOD	68	27
16764	1105993	33	22
16764	1113221	35	4
16764	1118644	29	1
22852	112464	67	5
72582	120142	46	5
24617	121917	24	5
72582	122366	45	6
97403	13212E5178-5	13	14
97403	13213E5171-307	70	2
97403	13213E5172-37	12	7
97403	13213E5177	15	6
97403	13213E5177-4	15	7
97403	13213E5178	13	13

NATIONAL STOCK NUMBER AND PART NUMBER INDEX

FSCM	PART NUMBER	FIGURE NO.	ITEM NO.
97403	13213E5180-2	5	1
97403	13213E5183	5	19
97403	13213E5184	4	
97403	13213E5187	4	18
97403	13213E5189-1	15	3
96906	13213E5189-2	13	3
97403	13213E5189-2	14	3
97403	13213E5189-2	15	4
97403	13213E5191	8	29
97403	13213E5192	14	16
97403	13213E5193	14	17
97403	13213E5194	13	7
97403	13213E5195	13	9
97403	13213E5196	13	10
97403	13213E5197	13	11
97403	13213E5203	13	8
97403	13213E5205	14	12
97403	13213E5207	70	22
97403	13213E5208	8	10
97403	13213E5216	68	6
97403	13123E5259	12	9
97403	13213E5260	11	6
97403	13213E5261	11	10
97403	13213E5262	11	3
97403	13213E5263	11	9
97403	13213E5264	12	13
97403	13213E5265	12	14
97403	13213E5266	12	6
97403	13213E5267	12	4
97403	13213E5268	12	10
97403	13213E5270	11	4
97403	13213E5271	12	12
97403	13213E5276	10	8
97403	13213E5277	10	2
97403	13213E5278	10	5
97403	13213E5279	10	1
97403	13213E5281	10	4
97403	13213E5282	8	24
97403	13213E5283-1	9	19
97403	13213E5283-3		
97403	13213E5292	68	44
97403	13213E5297	30	6
97403	13213E5301	66	7
97403	13213E5302	66	9
97403	13213E5304	68	28
97403	13213E5304	68	33
97403	13213E5316	6	10
97403	13213E5324	8	44
97403	13213E5325	6	4
97403	13213E5326	6	6
97403	13213E5326	8	39
97403	13213E5326	8	48
97403	13213E5327	6	2
97403	13213E5327-2	6	3
97403	13213E5328	6	5
97403	13213E5328	8	38
97403	13213E5328	8	42
97403	13213E5329-1	6	
97403	13213E5329-2	6	1
97403	13213E5330	8	41
97403	13213E5332	8	36
97403	13213E5334	8	34
97403	13213E5335	6	12
97403	13213E5336	8	31
97403	13213E5338	8	30
97403	13213E5346	8	12
97403	13213E5347	8	17
97403	13213E5348	8	13
97403	13213E5353	8	40
97403	13213E5373	8	32
97403	13213E5373	16	17
97403	13213E5374	9	1
97403	13213E5375	9	7
97403	13213E5376	9	2
97403	13213E5385	11	7
97403	13213E5388	72	4
97403	13213E5389-1	26	33
97403	13213E5389-2	70	4
97403	13213E5390	72	14
97403	13213E539	31	3
97403	13213E5421	66	3
97403	13213E5445	9	9
97403	13213E5461	68	10
97403	13213E5467	19	29
97403	13213E5468	9	8
97403	13213E5469-2	26	34

FSCM	PART NUMBER	FIGURE NO.	ITEM NO.
97403	13213E5474	8	1
97403	13213E5480	4	16
97403	13213E5480	5	16
97403	13213E5480	5	21
97403	13213E5484	9	10
97403	13213E5485	8	7
97403	13213E5487	8	5
97403	13213E5488	8	6
97403	13213E5490	8	8
97403	13213E5491	8	9
97403	13213E5492	8	9
97403	13213E5500	8	37
97403	13213E5510	9	3
97403	13213E5511	9	4
97403	13213E5513	9	5
97403	13213E6680	4	26
97403	13213E5357	28	14
97403	13216E6683	7	8
97403	13216E6684	7	3
97403	13216E6684-4	7	5
97403	13216E6685	7	9
97403	13216E6797	26	20
97403	13216E6798	26	25
97403	13216E6799	26	26
97403	13216E6800	26	21
97403	13216E6805	68A	2
97403	13216E6805	68	2
97403	13216E6806	11	2
97403	13216E9923	71	10
97403	13216E9929	9	6
97403	13219E111-123	72	16
97403	13219E1111-122	72	17
97403	13219E1111-124	72	15
97403	13219E1111-125	72	9
97403	13219E1111-126	72	8
97403	13219E1111-204	26	18
97403	13219E1111-1	27	8
97403	13219E1124-2	27	21
97403	13219E1127	27	13
97403	13219E1132-1	40	8
97403	13219E1132-2	40	6
97403	13219E1135-1	18	6
97403	13219E1135-2	18	6
97403	13219E1135-3	17A	10
97403	13219E1135-3	17	7
97403	13219E1135-4	17A	10
97403	13219E1135-4	17	7
97403	13219E1136-1	18	5
97403	13219E1136-2	18	5
97403	13219E1136	31	10
97403	13219E1139	31	6
97403	13219E1140	31	12
97403	13219E1141	31	13
97403	13219E1142	26	36
97403	13219E1144-1	30	1
97403	13219E1144-2	30	2
97403	13219E1146-1	31	5
97403	13219E1146-2	31	5
97403	13219E1147	31	4
97403	13219E1148	31	4A
97403	13219E1156	20	7
97403	13219E1158	21	5
97403	13219E1158-2	21	4
97403	13219E1160	26	37
97403	13219E1161	14	8
97403	13219E1161-13	14	7
97403	13219E1162	14	6
97403	13219E1167-1	27	20
97403	13219E1167-2	27	19
97403	13219E1168-2	27	18
97403	13219E1175	27	3
97403	13219E1178	40	11
97403	13219E1179	40	27
97403	13219E1182	27	9
97403	13219E1183	27	12
97403	13219E1184	27	11
97403	13219E1185	27	10
97403	13219E3462	27	20
97403	13219E3463-1	27	10
97403	13219E3463-1	27	10
97403	13219E3463-2	27	11

FSCM	PART NUMBER	FIGURE NO.	ITEM NO.
97403	13219E3464		
97403	13219E3465	27	14
97403	13219E3466	27	13A
97403	13219E3468-64	27	13B
97403	13219E3470	27	21
97403	13219E3471	27	8A
97403	13219E3473	27	12A
97403	13219E3482-105	27	9A
97403	13219E3487	18	
97403	13219E3497-2	31	13A
97403	13219E3597	31	5
97403	13219E3598	70	12
97403	13220E4451	70	11
97403	13220E9267-1	8	3
97403	13222E0552	68A	1
97403	13222E7239	68A	3
97403	13222E7242	2	10
97403	13222E7249	4	
97403	13222E7250	2	1
97403	13222E7258	4	
97403	13222E7259	7	11
97403	13222E7261	7	10
97403	13222E7263	2	7
97403	13222E7265-1	68A	
97403	13222E7265-1	68A	14
97403	13222E7265-2	68A	20
97403	13222E7269	68A	22
97403	13222E7271-1	68A	11
97403	13222E7271-2	68A	17
97403	13222E7278	68A	27
97403	13222E7279	68A	32
97403	13222E7282	68A	9
97403	13222E7282	68A	15
97403	13222E9865	68A	21
97403	13225E8221	33	21
72582	137405	68A	
24617	137421	36	1
72582	137421	37	2
72582	137422	36	3
72582	137423	37	17
72582	137423	26	5
24161	14B112INID	26	10
72582	144603	71	2A
72582	144606	46	6
24617	148344	46	7
72582	148344	39	14
72582	1503536	37	28
72582	1506983	43	4
79577	151-1	45	21
79577	151-1	4	14
79577	151-3	5	13
79577	151-3	4	13
79577	151-3	5	14
79577	151-4	4	15
79577	151-4	5	15
70040	1565109	24	4
72582	1565192	24	3
24617	1580377	[illegible]	8
72582	1595620	45	2
79577	1596	[illegible]	12
79577	1597	[illegible]	[illegible]
79577	1630	[illegible]	15
79577	1637	[illegible]	21
79577	1640	[illegible]	17
79577	1641	[illegible]	18
79577	1646	[illegible]	[illegible]
79577	1648	[illegible]	19
79577	1649	[illegible]	16
24617	178551	33	[illegible]
24617	178551	33	[illegible]
24617	178551	33	16
24617	178551	33	19
24617	178551	37	31
24617	178551	37	34
24617	179803	42	15
24617	179826	37	[illegible]
72582	179857	24	[illegible]
72582	186274	46	[illegible]
32770	186285	40	[illegible]
72582	186289	39	[illegible]
24617	186612	33	15

FSCM	PART NUMBER	FIGURE NO.	ITEM NO.
72619	22-1310-2900-201	19	18
72619	22-2900-200	19	16
70040	25025312	19	23
46576	259-2G	1	3
46576	259-2R	1	3
32770	272547	40	3
72582	272857	48	2
72582	273436	40	16
72582	273436	40	17
87373	30182-2-4B	19	24
45681	30182-6-6B	26	9
45681	30882-4-4B	19	26
45681	30882-6-6B	26	8
45681	30882-6-6B	26	12
72582	3146695	38	5
41625	32888-3	63	4
39428	3458T14	27	1
79577	3883-1	5	3
79577	3885-1	1	12
79577	3885-13	4	9
79577	3885-2	1	2
79577	3885-3	1	7
79577	3885-4	1	6
79577	3885-5	1	8
79577	3885-7R	1	3
79577	3885-8	1	13
97577	3885-9	1	4
79577	3885-9	4	5
79577	3885-9	5	5
79577	3885GREEN:::::	1	1
79577	3885RED	1	1
79577	3886-3	4	4
79577	3886-3	5	4
79577	3887-2	4	3
79577	3892-1	4	8
79577	3892-1	5	8
79577	3895-3	4	5
75219	4A2	68	25
90896	41M10AAA	27	2
59577	42-002-25	5	9
79577	42-002-25	1	14
79577	42-002-25	4	9
80244	42C14155-1	12	16A
80244	42C14155-1	14	20A
19557	435-401	26	40
24617	444552	26	6
72582	450865	45	17
24617	453296	19	7
72582	454906	39	15
72582	454939	33	6
35510	4924SC	30	7
94222	5-0-260	21	1A
94222	5-295	21	1C
72582	5100104	48	13
72582	5100366	33	14
72582	5102888	29	1
72582	5108891	33	5
72582	5109157	37	29
72582	5109255	61	20
72582	5109774	61	22
72582	5111904	40	24
72582	5114124	40	29
72582	5114727	40	30
72582	5114974	40	20
72582	5115214	38	20
72582	5116215	39	9
72582	5116216	37	32
72582	5116242	37	35
72582	5116242	38	14
72582	5116242	39	6
72582	5116357	37	10
72582	5116357	37	16
72582	5116357	38	11
72582	5116427	45	1
72582	5116444	40	22
72582	5116456	40	23
72582	5117061	24	[illegible]
72582	5118219	44	1
72582	5119[illegible]	38	3
72582	5119358	37	36

NATIONAL STOCK NUMBER AND PART NUMBER INDEX

FSCM	PART NUMBER	FIGURE NO.	ITEM NO.
72582	5119206	37	26
72582	5119208	39	13
72582	5119425	37	8
72582	5119426	38	17
72582	5119427	38	18
72582	5119457	48	14
72582	5121062	61	21
72582	5121175	39	17
72582	5121203	37	14
72582	5121205	45	16
72582	5121246	34	3
72582	5121893	37	21
72582	5122517	39	12
72582	5122563	37	5
72582	5122568	43	19
72582	5122569	37	16
72582	5122623	40	21
24617	5123118	24	15
72582	5123166	36	2
72582	5123247	38	21
72582	5123318	46	2
72582	5123320	46	1
72582	5124330	24	9
72582	5125066	37	17A
72582	5125294	33	17
72582	5125655	37	25
72582	5126315	37	1
72582	5126936	33	20
72582	5128139	38	4
72582	5128372	48	16
72582	5129291	40	31
72582	5130140	48	1
72582	5130294	46	4A
72582	5130442	48	3
72582	5130451	39	5
72582	5130995	35	3
72582	5131829	26	4
72582	5133431	45	20
72582	5134311	45	15
72582	5134333	33	13
72582	5134456	45	18
72582	5134477	45	19
72582	5135935	24	8
72582	5136712	33	20
72582	5137492	26	3
72582	5140551	39	2
72582	5143836	40	28
72582	5144686	36	7
72582	5145009	36	15
72582	5145009	39	20
72582	5145010	25	12
72582	5145010	39	19
72582	5145010	43	15
72582	5145010	45	11
72582	5145011	25	11
72582	5145011	39	18
72582	5145011	43	14
72582	5145014	38	19
72582	5145201	39	21
72582	5146080	62	15A
72582	5147039	33	13
72582	5147868	33	9
72582	5150193	44	4
72582	5150568	24	14
72582	5154216	44	3
72582	5154538	45	9
72582	5155818	24	10
72582	5155819	24	7
72582	5155854	24	16
72582	5156170	37	4
72582	5156170	38	7
72582	5157244	40	12

FSCM	PART NUMBER	FIGURE NO.	ITEM NO.
72582	5161874	48	8
72582	5163460	33	17
24617	5164789	48	11
72582	5167764	37	22
72582	5171509	46	3
72582	5173189	48	10
72582	5181801	37	6
72582	5181801	38	10
72582	5182628	33	9
72582	5182977	40	19
72582	5183247	48	4
72582	5185887	46	9
72582	5186840	37	3
72582	5186840	38	6
72582	5186841	39	1
72582	5186841	46	8
72582	5186976	37	20
72582	5187308	45	10
72582	5187309	45	7
72582	5187310	45	8
72582	5188273	39	8
72582	5199560	44	2
97576	52-6	70	6
77060	5289527	1	15
77060	5289527	4	10
77060	5289527	5	10
79577	5322-6	4	2
79577	5322-6	5	2
79577	5326	26	20
79577	5392	71	
72582	5573261	43	7
72582	5573534	45	5
72582	5573712	43	3
24617	5573734	43	12
72582	5574118	43	3A
72582	5574120	43	9
72582	5574123	43	10
72582	5574124	43	13
72582	5574125	43	5
72582	5574126	43	11
72582	5574161	25	10
72583	5574161	43	8
72582	5574905	45	4
72582	5574906	45	3
72582	5574961	25	9
72582	5575568	25	4A
72582	5577586	25	7
12168	607LT1 1-2X1 1-4	28	10A
72582	6435793	25	5
72582	6435794	25	6
72582	6436254	43	16
70040	6464933	19	22
24617	6473954	19	13
24617	6490264	19	28
77915	6631	68	1
91435	7530GS3	27	16
33525	803376	72	6
45681	831-4	19	25
87373	831-6	26	7
87373	831-6	26	11
94222	85-34-101-17	21	1B
72582	850901	37	27
24617	859151	38	22
81336	8630-24-3-9	26	20
33525	870483	72	5
79577	8705	26	32
75219	9003-8	68	43
75219	9004	68	16
75219	9004-6	68	13
77915	903	68	3
46576	91-2G	1	1A
16764	9418228	35	1

By Order of the Secretary of the Army:

E. C. MEYER
General, United States Army
Chief of Staff

Official:

ROBERT M. JOYCE
Major General, United States Army
The Adjutant General

DISTRIBUTION:
To be distributed in accordance with DA Form 12-25D, Organizational Maintenance Requirements for Boat Bridge Erection.

☆ U.S. GOVERNMENT PRINTING OFFICE : 1989 O - 242-451 (5334)

RECOMMENDED CHANGES TO EQUIPMENT TECHNICAL PUBLICATIONS

SOMETHING WRONG WITH THIS PUBLICATION?

FROM: (PRINT YOUR UNIT'S COMPLETE ADDRESS)
PFC JOHN DOE
COA, 3d ENGINEER BN
FT. LEONARDWOOD, MO 63108

DATE SENT

PUBLICATION NUMBER	PUBLICATION DATE	PUBLICATION TITLE
TM 5-1940-221-20P	22 Oct 82	Boat, Bridge Erection Inboard Diesel Engine, Aluminum Hull

BE EXACT. . PIN-POINT WHERE IT IS

PAGE NO	PARA-GRAPH	FIGURE NO	TABLE NO	IN THIS SPACE TELL WHAT IS WRONG AND WHAT SHOULD BE DONE ABOUT IT:
6	2-1 a			In line 6 of paragraph 2-1a the manual states the engine has 6 Cylinders. The engine on my set only has 4 Cylinders. Change the manual to show 4 Cylinders.
B1		4-3		Callout 16 on figure 4-3 is pointing at a bolt. In key to figure 4-3, item 16 is called a shim - Please correct one or the other.
125	line	20		I ordered a gasket, item 19 on figure B-16 by NSN 2910-00-762-3001. I got a gasket but it doesn't fit. Supply says I got what I ordered, so the NSN is wrong. Please give me a good NSN

PRINTED NAME, GRADE OR TITLE AND TELEPHONE NUMBER
JOHN DOE, PFC (268) 317-7111

SIGN HERE John Doe
JOHN DOE

DA FORM 1 JUL 79 2028-2

PREVIOUS EDITIONS ARE OBSOLETE

DRSTS-M Overprint 1, 1 Nov 80

P.S. IF YOUR OUTFIT WANTS TO KNOW ABOUT YOUR RECOMMENDATION MAKE A CARBON COPY OF THIS AND GIVE IT TO YOUR HEADQUARTERS

TEAR ALONG PERFORATED LINE

FILL IN YOUR
UNIT'S ADDRESS

FOLD BACK

DEPARTMENT OF THE ARMY

OFFICIAL BUSINESS
PENALTY FOR PRIVATE USE $300

COMMANDER
U S ARMY SUPPORT AND AVIATION MATERIEL READINESS COMMAND
ATTN: DRSTS-MPSD
4300 GOODFELLOW BOULEVARD
ST. LOUIS, MO 63120

TEAR ALONG PERFORATED LINE

RECOMMENDED CHANGES TO EQUIPMENT TECHNICAL PUBLICATIONS

SOMETHING WRONG WITH THIS PUBLICATION?

FROM: (PRINT YOUR UNIT'S COMPLETE ADDRESS)

DATE SENT

PUBLICATION NUMBER	PUBLICATION DATE	PUBLICATION TITLE
TM 5-1940-221-20P	22 Oct 82	Boat, Bridge Erection, Inboard Diesel Engine, Aluminum Hull

BE EXACT. . PIN-POINT WHERE IT IS

PAGE NO	PARA-GRAPH	FIGURE NO	TABLE NO

IN THIS SPACE TELL WHAT IS WRONG AND WHAT SHOULD BE DONE ABOUT IT:

PRINTED NAME, GRADE OR TITLE, AND TELEPHONE NUMBER

SIGN HERE

DA FORM 1 JUL 79 2028-2

PREVIOUS EDITIONS ARE OBSOLETE

DRSTS-M Overprint 2, 1 Nov 80.

P.S. IF YOUR OUTFIT WANTS TO KNOW ABOUT YOUR RECOMMENDATION MAKE A CARBON COPY OF THIS AND GIVE IT TO YOUR HEADQUARTERS

TEAR ALONG PERFORATED LINE

FILL IN YOUR UNIT'S ADDRESS

FOLD BACK

DEPARTMENT OF THE ARMY

_____

_____

OFFICIAL BUSINESS
PENALTY FOR PRIVATE USE $300

COMMANDER
U S ARMY SUPPORT AND AVIATION MATERIEL READINESS COMMAND
ATTN: DRSTS-MPSD
4300 GOODFELLOW BOULEVARD
ST. LOUIS, MO 63120

TEAR ALONG PERFORATED LINE

RECOMMENDED CHANGES TO EQUIPMENT TECHNICAL PUBLICATIONS

THEN. . JOT DOWN THE DOPE ABOUT IT ON THIS FORM, CAREFULLY TEAR IT OUT, FOLD IT AND DROP IT IN THE MAIL!

SOMETHING WRONG WITH THIS PUBLICATION?

FROM: (PRINT YOUR UNIT'S COMPLETE ADDRESS)

DATE SENT

PUBLICATION NUMBER	PUBLICATION DATE	PUBLICATION TITLE
TM 5-1940-221-20P	22 Oct 82	Boat, Bridge Erection, Inboard Diesel Engine, Aluminum Hull

BE EXACT. . PIN-POINT WHERE IT IS

PAGE NO	PARA-GRAPH	FIGURE NO	TABLE NO

IN THIS SPACE TELL WHAT IS WRONG AND WHAT SHOULD BE DONE ABOUT IT:

PRINTED NAME, GRADE OR TITLE AND TELEPHONE NUMBER

SIGN HERE

TEAR ALONG PERFORATED LINE

DA FORM 1 JUL 79 2028-2

PREVIOUS EDITIONS ARE OBSOLETE

DRSTS-M Overprint 2, 1 Nov 80.

P.S. IF YOUR OUTFIT WANTS TO KNOW ABOUT YOUR RECOMMENDATION MAKE A CARBON COPY OF THIS AND GIVE IT TO YOUR HEADQUARTERS.

TEAR ALONG PERFORATED LINE

FILL IN YOUR UNIT'S ADDRESS

FOLD BACK

DEPARTMENT OF THE ARMY

_____

_____

OFFICIAL BUSINESS
PENALTY FOR PRIVATE USE $300

COMMANDER
U S ARMY SUPPORT AND AVIATION MATERIEL READINESS COMMAND
ATTN: DRSTS-MPSD
4300 GOODFELLOW BOULEVARD
ST. LOUIS, MO 63120

RECOMMENDED CHANGES TO EQUIPMENT TECHNICAL PUBLICATIONS

THEN. . JOT DOWN THE DOPE ABOUT IT ON THIS FORM, CAREFULLY TEAR IT OUT, FOLD IT AND DROP IT IN THE MAIL!

SOMETHING WRONG WITH THIS PUBLICATION?

FROM: (PRINT YOUR UNIT'S COMPLETE ADDRESS)

DATE SENT

PUBLICATION NUMBER	PUBLICATION DATE	PUBLICATION TITLE
TM 5-1940-221-20P	22 Oct 82	Boat, Bridge Erection, Inboard Diesel Engine, Aluminum Hull

BE EXACT. . PIN-POINT WHERE IT IS

PAGE NO	PARA-GRAPH	FIGURE NO	TABLE NO

IN THIS SPACE TELL WHAT IS WRONG AND WHAT SHOULD BE DONE ABOUT IT:

PRINTED NAME GRADE OR TITLE AND TELEPHONE NUMBER

SIGN HERE

TEAR ALONG PERFORATED LINE

DA FORM 1 JUL 79 2028-2

PREVIOUS EDITIONS ARE OBSOLETE

DRSTS-M Overprint 2, 1 Nov 80.

[illegible] RECOMMENDATION MADE AT LOWER [illegible] AND GIVE TO YOUR HEADQUARTERS

FILL IN YOUR UNIT'S ADDRESS

FOLD BACK

DEPARTMENT OF THE ARMY

OFFICIAL BUSINESS
PENALTY FOR PRIVATE USE $300

COMMANDER
U S ARMY SUPPORT AND AVIATION MATERIEL READINESS COMMAND
ATTN: DRSTS-MPSD
4300 GOODFELLOW BOULEVARD
ST. LOUIS, MO 63120

TEAR ALONG PERFORATED LINE

The Metric System and Equivalents

Linear Measure

1 centimeter = 10 millimeters = .39 inch
1 decimeter = 10 centimeters = 3.94 inches
1 meter = 10 decimeters = 39.37 inches
1 dekameter = 10 meters = 32.8 feet
1 hectometer = 10 dekameters = 328.08 feet
1 kilometer = 10 hectometers = 3,280.8 feet

Weights

1 centigram = 10 milligrams = .15 grain
1 decigram = 10 centigrams = 1.54 grains
1 gram = 10 decigram = .035 ounce
1 dekagram = 10 grams = .35 ounce
1 hectogram = 10 dekagrams = 3.52 ounces
1 kilogram = 10 hectograms = 2.2 pounds
1 quintal = 100 kilograms = 220.46 pounds
1 metric ton = 10 quintals = 1.1 short tons

Approximate

To change	*To*	*Multiply*
inches	centimeters	2.5
feet	meters	.3
yards	meters	.9
miles	kilometers	1.6
square inches	square centimeters	6.4
square feet	square meters	.0
square yards	square meters	.836
square miles	square kilometers	2.590
acres	square hectometers	.405
cubic feet	cubic meters	.028
cubic yards	cubic meters	.765
fluid ounces	milliliters	29.573
pints	liters	.473
quarts	liters	.946
gallons	liters	3.785
ounces	grams	28.349
pounds	kilograms	.454
short tons	metric tons	.907
pound-feet	newton-meters	1.365
pound-inches	mewton-meters	.11375

[illegible]	[illegible]	
square [illegible]	square	
square hectometers	acres	2.[illegible]
cubic meters	cubic feet	35.315
cubic meters	cubic yards	1.308
milliliters	fluid ounces	.034
liters	pints	2.113
liters	quarts	1.057
liters	gallons	.264
grams	ounces	.035
kilograms	pounds	2.205
metric tons	short tons	1.102

Temperature (Exact)

°F	Fahrenheit temperature	5/9 (after subtracting 32)	Celsius temperature	°C